CITY OF WESLACO

BID PROPOSAL
FOR

DETENTION POND AND RECONSTRUCTION OF SUGARCANE DRIVE FROM MILE 6 WEST (WESTGATE DR) TO MILE 5 ½ WEST (BORDER RD)

STATE OF TEXAS
MARK D. CORBITT
101980
REGISTERED
PROFESSIONAL ENGINEER

04-23-2014

Prepared by:

TEDSI INFRASTRUCTURE GROUP
Consulting Engineers
TEDSI
TBPE Firm No. 1640
1201 East Expressway 83 ♦ Mission, Texas 78572
Tel: (956) 424-7898
Fax: (956) 424-7022

TABLE OF CONTENTS
DETENTION POND AND RECONSTRUCTION OF SUGARCANE DRIVE FROM MILE 6 WEST (WESTGATE DR) TO MILE 5 ½ WEST (BORDER RD)

1) Advertisement and Invitation for Bids
2) City of Weslaco Legal Notice
3) Bidder Acknowledgement
4) Information for Bidders
5) Bid Form
6) Bid Bond
7) Draft Contract
8) Non Collusion
9) Payment Bond
10) Performance Bond

11) **Exhibit C**
- **a.** Insurance

12) General Conditions of the Agreement
13) Title 29 Labor
14) Standard General Condition of Construction Contract
15) Supplemental General Condition

16) **Exhibit A** General Notes & Standard Specifications
- **a.** Technical Specifications
- **b.** Hidalgo County Specifications as per 340
- **c.** Government Specifications & Special Provisions

17) **Exhibit B**
- **a.** Debarment
- **b.** W-9
- **c.** Bidder/Vendor Application
- **d.** Conflict of Interest Memo
- **e.** Conflict of Interest Form
- **f.** Sales Tax and Local Sales Tax Certificate

18) **Exhibit D Border Wage Rates**
- **a.** Government code Ch 2258
- **b.** Prevailing Wage Rate
- **c.** Davis Bacon

19) **Exhibit E**
- **a.** Checklist
- **b.** Change Order
- **c.** Payment of Application
- **d.** Estimate Quantity Update
- **e.** Schedule of Values
- **f.** Contract Time Statement
- **g.** Colonia Testing Requirement
- **h.** List of Suppliers

i. Partial Release of Lien
j. Contractor's Affidavit of Payment of Debts and Claims
k. Prevailing Wage Rates Certificate Statement
l. Certificate of Construction Completion
m. Contractor's Affidavit of Release of Liens

20) Construction Identification Sign

REQUEST FOR BIDS

(City of Weslaco)

TO SUPPLY CITY OF WESLACO with sealed bids on:

DETENTION POND AND RECONSTRUCTION OF SUGARCANE DRIVE FROM MILE 6 WEST (WESTGATE DR) TO MILE 5 ½ WEST (BORDER RD)

A BIDDER'S BOND from a reliable surety company licensed to operate in the State of Texas or certified Cashier's Check, payable without recourse to the City of Wesalco, for the amount of not less than **5%** of the total bid shall accompany the bid as guaranty that, if awarded the contract, the bidder will enter into a contract with the City of Weslaco. Payment and Performance Bonds shall be executed except in the event into a single payment contract with the City of Weslaco in lieu of a Performance Bond. In the event the total amount bid is $25,000 or less, the successful contract has the option to enter into a single payment contract with the City of Weslaco in lieu of a Payment and Performance Bond.

Bid Packets may be obtained from the office of **TEDSI INFRASTRUCTURE GROUP, INC. 1201 E. EXPRESSWAY 83, Mission, Texas 78572,** Phone No **(956) 424-7898** for the amount of **$150.00 each.** General and/or Prime Contractors submitting bids and/or proposals to the City of Wesalco shall be **non-refundable**.

PRE-BID CONFERENCE is scheduled for **FRIDAY, MAY 2, 2014** at **10:00 AM** at **CITY OF WESALCO CITY HALL – PURCHASING CONFERENCE ROOM, 255 S. KANSAS AVE WESALCO, TEXAS 78596**

UPON SUBMITTING SEALED BID(S), bidders are required to properly identify (handwritten, typed or printed) sealed envelope and/or packet as follows: Bidder's name and address on the upper left hand corner of the sealed envelope(s) and/or package(s) and Bid No(s):

DETENTION POND AND RECONSTRUCTION OF SUGARCANE DRIVE FROM MILE 6 WEST (WESTGATE DR) TO MILE 5 ½ WEST (BORDER RD)

on the lower left hand corner of sealed envelope/and or packet. **OVERNIGHT MAIL MUST ALSO BE PROPERLY LABELED ON THE OUTSIDE OF EXPRESS ENVELOPE OR PACKAGE.**

The sealed bid must contain one (1) original and three (3) copies of bid and must be clearly identified and addressed for delivery to:

Homer Rhodes
City of Wesalco
Purchasing Office

US Postal Mail/Courier Address
City Hall
255 S. Kansas Ave
Wesalco, Texas 78596

Physical Location:
City Hall
255 S. Kansas Ave
Wesalco, Texas 78596

Sealed bids will be accepted until **1:30 p.m. on Friday, May 9, 2014** at which time they will be opened in the City of Wesalco City Hall Purchasing Conference Room at **Physical Location: 255 S Kanas Ave, Weslaco, Texas 78596**. NO FACSIMILES OR LATE ARRIVALS WILL BE ACCEPTED. ANY BID RECEIVED AFTER THAT TIME WILL NOT BE OPENED AND WILL BE RETURNED

Attention is called to the fact that not less than, the federally determined prevailing (**Davis-Bacon and Related Acts**) wage rate, as issued and contained in the contract documents, must be paid on this project. In addition, the successful bidder must ensure that employees and applicants for employment are not discriminated against because of race, color, religion, sex, age, disability or national origin.

BIDS MAY BE HELD by the City of Wesalco for a period not to exceed ninety (90) days from the date of the opening of bids for the purpose of reviewing the bids and investigating the qualifications of bidders, prior to awarding of the contract.

THE City reserves the right to refuse and reject any/all bids and to waive any/all formalities or technicalities, or to accept the bids considered the best and most advantageous to the City.

LEGAL NOTICE BID NO: 2013-14-08

1. Sealed bids will be received for **"DETENTION POND AND RECONSTRUCTION OF SUGARCANE DRIVE FROM MILE 6 WEST TO MILE 5 ½ WEST"** in accordance with the specifications attached as Exhibit "A" hereto. Bids should address all specifications set forth. Bidders may suggest substitutions of features which they feel would be in the best interest of City of Weslaco ("City"). Strong rationale must be presented for any deviation from the specifications. City of Weslaco reserves the right to reject the deviation and its effect on the overall bid.

2. One (1) original and Three (3) copies of all bids are required with the bidders name and return address clearly typed/printed on upper left hand corner and the proper notation clearly typed/printed on the lower left hand corner of the envelope and/or package: **BID NO: 2013-14-08 DETENTION POND AND RECONSTRUCTION OF SUGARCANE DRIVE FROM MILE 6 WEST TO MILE 5 ½ WEST"** and in City's City Hall, 255 S. Kanas, Weslaco, Texas, 78596 **on or before 1:30 p.m., Friday, May 09, 2014.** NO FACSIMILES OR LATE ARRIVALS WILL BE ACCEPTED. ANY RFB RECEIVED AFTER THAT TIME WILL NOT BE OPENED AND WILL BE RETURNED. OVERNIGHT MAIL MUST ALSO BE PROPERLY LABELED ON THE OUTSIDE OF EXPRESS ENVELOPE OR PACKAGE WITH REFERENCE TO: **BID NO: 2013-14-08 DETENTION POND AND RECONSTRUCTION OF SUGARCANE DRIVE FROM MILE 6 WEST TO MILE 5 ½ WEST".** City of Weslaco reserves the right to refuse and reject any/all RFB and to waive any/all formalities or technicalities, or to accept the RFB considered the best and most advantageous to City of Weslaco. City of Weslaco reserves the right to refuse and reject any/all bids and to waive any/all formalities or technicalities, or to accept the bid considered the best and most advantageous to City of Weslaco

3. City of Weslaco reserves the right to: A. separate and accept, or eliminate any item(s) listed under this bid that it deems necessary to accommodate budgetary and/or operational requirements; B. reject any or all bids submitted and further reserves the right to design the evaluation criteria to be used in selecting the lowest and best bid for approval; and C. award the bid to one bidder or to multiple bidders if the City determines it is in its best interest to do so."

4. The Bidder shall not substitute items named in the bid without the express written consent of City of Weslaco. Failure of the delivered item(s) to perform as specified, or failure to meet the stated delivery schedule shall release City of Weslaco from all obligations to the contracting party with regard to the item(s) in question. In such event, City may elect to award the contract to the next-lowest responsible bidder, or to reject all bids and re-advertise.

5. For work to be performed at a City owned or operated location, each bidder shall, in its sole discretion, visit the job site before preparing the bid and thoroughly familiarize himself/herself with existing conditions. Bidder should take field dimensions and note all circumstances which affect the dollar amount of the bid.

6. Descriptive specifications are referenced in this document to indicate the general kind and quality of equipment desired by City of Weslaco. Due to various styles and models

of equipment, bidders are required to include illustrations, specifications, explanation of warranties, and service data with their bid including catalogue numbers and any necessary references.

7. No bid may be withdrawn within thirty (30) days from the scheduled time to open bids.

8. Proposed prices are to remain firm for a minimum of ninety (90) days after bid opening.

9. Any interpretations, amendments, corrections or changes to this bid document must be in a written addendum and signed by the County Judge or his designee. Addenda will be mailed to all who are known to have received a copy of the Request for Bids. Bidders shall acknowledge receipt of all addenda as a part of their bid.

10. City reserves the right to accept or reject any or all bids.

11. Costs are to be net F.O.B., City Prepaid.

12. City is exempt from Federal Excise Tax, State Tax and Local Tax. Do Not include tax in cost figure. If it is determined that tax was included in the cost figures it will not be included in the tabulation of any awards. Tax exemption certificates will be furnished upon request.

13. Funds for this procurement have been provided through the City budget for this fiscal year only. City, on an annual basis, has the right to reconsider a contract during the budget process for ensuing years if financial resources of City are insufficient to meet the liabilities of said contract. The award of a bid or contract hereunder will not be construed to create a debt of the City which is payable out of funds beyond the current fiscal year.

14. Upon award and prior to execution of a contract, Sole Proprietorships are required to submit a copy of their social security cards to the City of Weslaco Auditor's Office in order to establish an account with the City. All awarded vendors must submit a completed W-9 and a copy o their Federal ID Number Certificate.

15. DELIVERY INSTRUCTIONS:

- No deliveries accepted after 3:00 P.M., Monday-Friday.

- At least seventy two (72) hours prior notice of delivery must be given to Purchasing Agent before delivery will be accepted.

- If you need additional information call the office listed below:

Homer Rhodes
City of Weslaco
Purchasing Office
255 S. Kansas Ave, Weslaco, Texas
(956) 447-2240

16. BILLING AND PAYMENT INSTRUCTIONS:

. Invoices must include:

a) Name and address of successful bidder
b) Name and address of receiving department or official
c) Purchase Order Number (if any)
d) Notation - **"DETENTION POND AND RECONSTRUCTION OF SUGARCANE DRVIE FROM MILE 6 WEST TO MILE 5 ½ WEST"** Descriptive information as to the items or services delivered, including product code, item number, quantity, etc.

. Discount payments will be considered when offered.

. Contact person for Billing and Payment questions:

Homer Rhodes
City of Wesalco
Purchasing Office

17. Schedule of Events

Bid Opening, 1:30 PM	May 09, 2014
Award of Contract	May 20, 2014
Commence Work or Deliver Products	June 2, 2014

18. Bid or Performance Bond and Debarment Certification; Payment Under Contract:

. If the contract proposed is for the construction of public works or is for a contract for goods & services exceeding $100,000, all bidders shall furnish a good and sufficient bid bond in the amount of five percent of the total contract price. A bid bond must be executed with a surety company authorized to do business in Texas. All bidders are also required to furnish a certification or acknowledgment stating that the contractor or vendor is free from suspension or debarment pursuant to federal regulation 45CFR Part 76.

. Together with the signing of a contract or issuance of a purchase order following the acceptance of a bid, and prior to commencement of the actual work, the bidder shall furnish a performance bond to the City for the full amount of the contract, if that contract exceeds $50,000.

. If the contract is for $50,000 or less, no money will be paid to the contractor until completion and acceptance of the work or the fulfillment of the purchase obligation to the City, and, if applicable, the receipt by City of satisfactory evidence that all subcontractors and material men have been paid.

. If a contract is for the construction, alteration or repair of public buildings or public works, the contractor *shall* provide a payment bond for a contract in excess of Twenty Five Thousand Dollars ($25,000.00), as required by Tex. Govt. Code Ch. 2253.

. For requirements contracts, bond requirements are determined by applying the proposed unit price to the estimated quantities included in the specifications.

19. Ethical Standards:

. It shall be a breach of ethics to offer, give or agree to give any elected official, department head or employee, or former elected official, department head or employee, of the City, or for any elected official, department head or employee or former elected official, department head or employee of the City, to solicit, demand, accept or agree to accept from another person, entity or organization, a gratuity or an offer of employment in connection with any decision, approval, disapproval, recommendation, preparation or any part of a program requirement or purchase request, influencing the content of any specification or procurement standard, rendering of advice, investigation, auditing, or in any other advisory capacity in any proceeding or application, request for ruling, determination, claim or controversy, or other particular matter pertaining to any program requirement or a contract or subcontract, or to any solicitation or proposal therefore pending before any department or agency of the City.

. It shall be a breach of ethics for any payment, gratuity or offer of employment to be made by or on behalf of a subcontractor under a contract to the prime contractor or higher tier subcontractor for any contract for the City, or any person associated therewith, as an inducement for the award of a subcontract or order.

. No public official shall have an interest in a contract awarded hereunder except in accordance with Tex. Loc. Govt. Code Chapter 171.

20. Disclosure of Conflict of Interest

. Effective January 1, 2006, Chapter 176 of the Texas Local Government Code requires that any vendor, person, consultant or contractor considering doing business with City of Weslaco ("the City") to disclose in the Conflict of Interest Questionnaire (the "CIQ") attached as Exhibit D, the vendor, person, consultant or contractor's affiliation or business relationship that might cause a conflict of interest with the City. By law, the CIQ must be filed with the City of Weslaco Office no later than the seventh business day after the date the person becomes aware of facts that require that statement to be filed. The disclosure requirement applies to a person or business who contracts or seeks to contract with City of Weslaco for the sale or purchase of property, goods or service. Any purchase order or contract resulting from this process shall be considered null and void if the successful bidder fails to comply with Texas Local Government Code Chapter 176. Vendors, consultants, contractors and others who desire to conduct business with City of Weslaco are encouraged to refer to Texas Local Government Code Chapter 176 for the details of this law. An offense under Texas Local Government Code Chapter 176 is a Class C Misdemeanor.

Please Submit completed CIQ forms to the City of Weslaco Purchasing Office located at 255 S. Kansas Ave, Weslaco, Texas 78579-City of Weslaco
COMPLETION AND SUBMISSION OF FORM CIQ IS THE SOLE RESPONSIBILITY OF THE PROSPECTIVE BIDDER.

21. If, during the life of any contract or bid awarded, the successful bidder's net prices generally available to other customers for items awarded herein are reduced below the contracted price, it is understood and agreed that the benefits of such reduction shall be extended to City.

22. Bids, and all goods and services provided thereunder, shall comply with all federal, state and local laws concerning this type(s) of goods and/or services.

23. Minimum Standards For Responsible Prospective Bidders: A prospective bidder must affirmatively demonstrate bidder's responsibility. A prospective bidder, by submitting a bid, represents to City that it meets the following requirements:

- Possess or is able to obtain adequate financial resources as required to perform under the bid;
- Be able to comply with the required or proposed delivery schedule;
- Have a satisfactory record of performance;
- Have a satisfactory record of integrity and ethics;
- Be otherwise qualified and eligible to receive an award.

24. Successful bidder will pay or cause to be paid, without cost or expenses to City, all FICA, FUTA/SUTA and Federal Income Withholding Taxes of all employees, and all wages and benefits as required by Federal or State law. Successful bidder's officers, agents and/or employees will not be entitled to any benefits of an employee or elected official of City, including, but not limited to, benefits associated with City's civil service system.

25. Any contract award to a successful bidder will be in effect until (a) the contract expires, (b) delivery and acceptance of products, and/or performance of services ordered, or (c) terminated by City with thirty day's written notice prior to cancellation.

26. City reserves the right to enforce performance of any contract awarded hereunder in any manner prescribed by law or deemed to be in the best interest of the City in the event of breach or default by successful bidder; City reserves the right to terminate any contract immediately in the event a successful bidder fails to:

    A. Meet schedules;
    B. Pay any required fees or taxes; or
    C. Otherwise perform in accordance with the specifications.

27. Successful bidder shall defend, indemnify and save harmless City and all its elected officials, officers, agents and employees from all suits, actions, or other claims of any character, name and description brought for or on account of any injuries or damages received or sustained by any person, persons, or property on account of any negligent act or fault of the successful bidder, or of any agent, employee, subcontractor or supplier of successful bidder in the execution of, or performance under, any contract which may result from bid award or which arises from any event or casualty happening on or within City premises themselves or happening upon or in any halls, elevators, entrances, stairways or approaches of or to such City facilities. Successful bidder shall pay any judgement with costs which may be obtained against City growing out of such injury or damages, and shall, upon request, provide a defense to City by counsel reasonably

acceptable to City. Successful bidder's indemnity hereunder shall include, but is not limited to, claims relating to patent, copyright or trademark infringement, and the like, arising out of the goods and services provided by successful bidder.

28. Successful bidder shall warrant that all items/services shall conform with the specifications and/or all warranties provided under the Uniform Commercial Code and be free from all defects in material, workmanship and the like. Items supplied under a contract pursuant to this Request for Bids shall be subject to City's approval. Items found to be defective or not meeting specifications shall be replaced by successful bidder within two business days at no expense to City. Items not picked up within one (1) week after notification shall be deemed a donation to City and may be used or disposed of at City's discretion and without waiver of any other rights of City as to the item's nonconformity.

29. This document and any disputes arising hereunder shall be governed and construed according to the laws of the State of Texas, and will be performable exclusively in City of Weslaco, Texas.

30. The successful bidder shall not assign, sell, transfer or convey its rights under any awarded contract, in whole or in part, without the prior written consent of City.

BIDDERS ACKNOWLEDGEMENT
Bid for
CITY OF WESLACO
"DETENTION POND AND RECONSTRUCTION OF SUGARCANE DRIVE FROM MILE 6 WEST TO MILE 5 ½ WEST"
BID NO.: 2013-14-08

To: Homer Rhodes,
Purchasing Office
225 S. Kansas Avenue
Weslaco, Texas 78596

In accordance with the Specifications, and subject to all laws and regulations of the United States and state and local laws, the undersigned bidder proposes and commits to furnish all labor, equipment, material, software and services as set forth in the documents hereinbefore mentioned. The undersigned bidder further agrees, upon acceptance of its bid, to execute a contract and/or Purchase Order issued by City of Weslaco for performing and completing the work described in the Specifications within the time stated and for the prices proposed in the documents attached hereto and made a part hereof.

Bidder acknowledges receipt of all of the pages of the documents referenced in the Invitation to Bid Checklist presented in connection with this procurement. Bidder understands that City of Weslaco reserves the right to reject any or all bids and further reserves the right to design the evaluation criteria to be used in selecting the lowest and best bid.

Bidder agrees that this bid shall be good and may not be withdrawn for a period of ninety (90) calendar days after the scheduled closing time for receiving bids, as contained in the Specifications.

Respectfully submitted,

Bidder: _____

Address: _____

By: _____

Printed Name: _____

Title: _____

INFORMATION FOR BIDDERS

1. Receipt and Opening of Bids

The City of Weslaco (herein called the "Owner"), invites bids on the form attached hereto, all blanks of which must be appropriately filled in. Bids will be received by the Owner a the City of Weslaco Purchasing department until Friday**, May 09, 2014** **at 1:30 p.m**. and then at said office publicly open and read aloud. The envelopes containing the bids must be sealed, addressed to Homer Rhodes, City of Weslaco Purchasing Agent at 255 S. Kansas, Texas 78596 and designated as **BID NO:2013-14-08 "DETENTION POND AND RECONSTRUCTION OF SUGARCANE DRIVE FROM MILE 6 WEST TO MILE 5 ½ WEST".**

The owner may consider informal any bid not prepared and submitted in accordance with provisions hereof and may waive any informalities or reject any and all bids. Any bid may be withdrawn prior to the above scheduled time for the opening of bids or authorized postponement thereof. Any bid received after the time and date specified shall not be considered. No bidder may withdraw a bid within 60 days after the actual date of the opening thereof.

2. Preparation of Bid

Each bid must be submitted on the prescribed from and accompanied by Certification by Bidder Regarding Equal Employment Opportunity, Form, and Certification by Bidder (contractor), concerning Labor Standards and Prevailing Wage Requirements. All blank spaces for bid prices must be filled in, in ink or typewritten, in both words and figures, and the foregoing Certificates must be fully completed and executed when submitted.

Each bid must be submitted in a sealed envelopes bearing on the outside the name of the bidder, his address, and the name of the project for which the bid is submitted. If forwarded by mail, the sealed envelope containing the bid must be enclosed in another enveloped addressed as specified in the bid form.

3. Subcontracts

The bidder is specifically advised that any person, firm, or other party to whom is proposed to ward a subcontract under this contract –

a Must be acceptable to the Owner after verification of the current eligibility status, and,

b Approval of the proposed subcontract award cannot be given by the Owner unless and until the proposed subcontractor has submitted the Certification and/or other evidence showing that it has fully complied with any reporting requirements to which it is or was subject. Although the bidder is not required to attach such Certification by proposed subcontractors to his bid, the bidder is here advised of this requirement so that appropriate action can be taken to prevent subsequent delay in subcontract awards.

4. Telegraphic Modification

Any bidder may modify his bid by telegraphic communication at any time prior to the scheduled closing time for receipt of bids, provided such telegraphic communication is received by the Owner prior to the closing time, and provided further, the Owner is satisfied that a written confirmation of the telegraphic modification over the signature of the bidder was mailed prior to the closing time. The telegraphic communication should not reveal the bid price but should provide the additional or subtraction or other modification so that the final prices or terms will not be known by the Owner until the sealed bid is opened. If written confirmation is not received within two days from the closing time, no consideration will be given to the telegraphic modification.

5. Method of Bidding

The Owner invites the following bid(s): **BID NO:2013-14-08 "DETENTION POND AND RECONSTRUCTION OF SUGARCANE DRIVE FROM MILE 6 WEST TO MILE 5 ½ WEST".**

6. Qualifications of Bidder

The Owner may make such investigations as he deems necessary to determine the ability of the bidder to perform the work, and the bidder shall furnish to the Owner all such information and data for this purpose as the Owner may request, the Owner reserves the right to reject any bid if the evidence submitted by, or investigation of, such bidder fails to satisfy the Owner that such bidder is properly qualified to carry out the obligations of the contract to complete the work contemplated therein. Conditional bids will not be accepted.

7. Bid Security

Each bid must be accompanied by certified check of the bidder, or a bid bond prepared on the form of bid bond attached hereto, duly executed by the bidder as principal and having as surety thereon a surety company approved by the Owner, in the amount of 5% of the bid. Such checks or bid bonds will be returned to all except the three lowest bidders within three days after the opening of bids, and the remaining checks, or bid bonds will be returned promptly after the Owner and the accepted bidder have executed the contract, or if no award has be made within 60 days after the date of the opening of bids, upon demand of the bidder at any time thereafter, so long as he has not been notified of the acceptance of his bid.

8. Liquidated Damages for Failure to enter into Contract

The successful bidder, upon his failure or refusal to execute and deliver the contract and bonds required within 10 days after he has received notice of the acceptance of his bid, shall forfeit to the Owner, as liquidated damages for such failure or refusal, the security deposited with his bid.

9. Time of Completion and Liquidated Damages

Bidder must agree to commence on or before a date to be specified in a Written "Notice to Proceed" of the Owner and to fully complete the project within **90** consecutive calendar days thereafter. Bidder must agree also to pay as liquidated damages, the sum of **$500.00** for each consecutive calendar day thereafter as hereinafter provided in the General Conditions.

10. Condition of Work

Each bidder must inform himself fully of the conditions relating to the construction of the project and the employment of labor thereon. Failure to do so will not relieve a successful bidder of his obligation to furnish all material and labor necessary to carry out the provisions of his contract. Insofar as possible the contractor, in carrying out his work, must employ such methods or means as will not cause any interruption of or interference with work of any other contractor.

11. Addenda and Interpretations

No interpretation of the meaning of the plans, specifications or other pre-bid documents will be made to any bidder orally.

Every request for such interpretation should be in writing addressed to **TEDSI Infrastructure Group 1201 E. Expressway 83, Mission TX 78572. Attn Mark Corbitt, P.E.** and to be given consideration must be received at least five days prior to the date fixed for the opening of bids. Any all such interpretations and any supplemental instructions will be in the form of written addenda to the specifications which, if issued, will mailed by certified mail with return receipt requested to all prospective bidders (at the respective addresses furnished for such purposes), not later than three days prior to the date fixed for the opening of bids. Failure of any bidder to receive any such addendum or interpretation shall not relieve such bidder from any obligation under his bid as submitted. All addenda so issued shall become part of the contract documents.

12. Security for Faithful Performance

Simultaneously with his delivery of the executed contract; the contractor shall furnish a surety bond or bonds as security for faithful performance of this contract and for the payment of all persons performing labor on the project under this contract and furnishing materials in connection with this contract, as specified in the General Conditions included herein. The surety on such bond or bonds shall be a duly authorized surety company satisfactory to the Owner.

13. Power of Attorney

Attorney-in-fact who sign bonds or contract bonds must file with each bond a certified and effectively dated copy of their power of attorney.

14. Notice of Special Conditions

Attention is particularly called to those parts of the contract documents and specification which deal with the following;

a Inspection and testing of materials
b Insurance requirements
c Wage rates
d States allowances

15. Laws and Regulations

The bidder's attention is directed to the fact that all applicable State laws, municipal ordinances, and the rules and regulations of all authorities having jurisdiction of the project shall apply to the contract throughout, and they will be deemed to be included in the contract the same as though herein written out in full.

16. Method of Award – Lowest Qualified Bidder

If at the time this contract is to be awarded, the lowest base bid submitted by a responsible bidder does not exceed the amount of funds then estimated by the Owner as available to finance the contract the contract will be awarded on the base bid only. If such bid exceeds such amount, the Owner may reject all bids or may award the contract on the base bid combined with such deductible alternates applied in numerical order in which they are listed in the form of Bid, as produces a net amount which is within the available funds.

17. Obligation of Bidder

At the time of the opening of bids each bidder will be presumed to have inspected the site and to have read and to be thoroughly familiar with the plans and contract documents (including all addenda). The failure or omission of any bidder to examine any form, instrument or document shall in no way relieve any bidder from any obligation in respect of his bid.

INFORMATION FOR BIDDERS

18. SAFETY STANDARDS AND ACCIDENTS PREVENTION

With respect to all work performed under this contract, the contractor shall:

1 Comply with the safety standards provision of applicable laws, building and construction codes and the "Manual of Accident Prevention in Construction" published by the Associates General Contractors or America, the requirements of the Occupational Safety and Health Act of 1970 (Public Laws 91-596), and the requirements of Title 29 of the Code of Federal Regulations, Section 1518 as published in the "Federal Register", Volume 36, No 75, Saturday, April 17, 1971.

2 Exercise every precaution at all times for the prevention of accidents and the protection of persons (including employees) and property.

3 Maintain at his office or other well known place at the job site, all articles necessary for giving first aid to the injured, and shall make standing arrangements for the immediate removal to a hospital or a doctor's care of persons (including employee), whom may be injured on the job site. In no case shall employee be permitted to work at a job site before the employer has made a standing arrangement for removal of injured person to a hospital or a doctor's care.

SPECIAL PROVISIONS

1. The City of Weslaco reserves the right to partially award the contract in order to meet the budget.

2. It shall be the Contractor's responsibility to locate underground utilities, whether shown or not shown on the drawings, sufficiently in advance of operations to preclude damage to same.

3. Water, sewer, or other utility serves shall not be interrupted. Any damages to existing utilities will be Contractor's responsibility.

4. In the event of damage to underground facilities, whether shown or not shown in the drawings, the Contractor shall make the necessary repairs to place the facilities back in service at no increase in the Contractors price and all such repairs shall conform to the requirements of the company or agency servicing the facility

5. The Contractor shall exercise extra care to prevent damage to all other structures in the area including, fence, roads, pipelines, utilities, etc., whether publicly or privately owned.

6. Until acceptance by the Engineer of any part or all of the construction, as provided for in the plans and these specifications, it shall be under the charge and care of the contractor, and he shall take every necessary precaution against injury or damage to any part of the work. The Contractor shall rebuild, repair, restore and make good, at his own expense, all injuries or damage to any portion of the work before its completion and acceptance.

7. In case the Contractor deems extra compensation is due him for proposed work not covered in the contract, the Contractor shall notify the Engineer in writing of his claim for such extra compensation before he begins the work. Failure on the part of the Contractor to give such notification shall constitute a waiver of claim for such extra compensation. The Contractor shall not proceed until a written Change Order is approved by the Owner, Engineer, and Contractor.

8. Prospective bidders should make a careful examination of the projects sites.

9. Contractor shall review his overall method and schedule of construction with the Hidalgo County Pct. 1 Prior to construction for proper coordination of inspection.

10. No open trenches or excavation shall be left open overnight.

BASE BID - Detention Pond & Sidewalk on South Side of Sugarcane Dr					
SPEC NO.	DESCRIPTION	QTY	UNIT	UNIT PRICE (in figures)	UNIT TOTAL (in figures)
0100-2001	PREPARING ROW	6	AC	$	$
0110-2002	EXCAVATION (CHANNEL)	13236	CY	$	$
0132-2006	EMBANKMENT (FINAL)(DENS CONT)(TY C)	40	CY	$	$
0164-2023	CELL FBR MLCH SEED(PERM)(RURAL)(CLAY)	34936	SY	$	$
0432-2001	RIPRAP (CONC)(4 IN)	5	CY	$	$
0464-2003	RC PIPE (CL III)(18 IN)	1020	LF	$	$
0465-2005	MANH (COMPL)(TY M)	4	EA	$	$
0465-2012	INLET (COMPL)(TY A)	2	EA	$	$
0465-2103	INLET (COMPL)(TY F)	2	EA	$	$
0465-2104	INLET EXT (TY A)	4	EA	$	$
0465-2109	INLET EXT (TY F)	2	EA	$	$
0465-2113	INLET (COMPL)(TY CC)	1	EA	$	$
0467-2177	SET (TY I)(S= 4 FT)(HW= 3 FT)(6:1)(P)	1	EA	$	$
0467-2288	SET (TY II)(24 IN)(RCP)(6:1)(P)	1	EA	$	$
0479-2001	ADJ MANHS	2	EA	$	$
0502-2001	BARRICADES, SIGNS AND TRAFFIC HANDLING	3	MO	$	$
0529-2012	CONC CURB & GUTTER (TY A)(BARRIER)	4100	LF	$	$
0529-2020	CONC CURB & GUTTER(TY A)(VALLEY GUTTER)	139	LF	$	$
0531-2003	CONC SIDEWALKS (5') (6")	1635	LF	$	$
0531-2041	CURB RAMPS (TY 10)	10	EA	$	$
1122-2002	ROCK FILTER DAMS (INSTALL) (TY 2)	100	LF	$	$
1122-2009	ROCK FILTER DAMS (REMOVE)	100	LF	$	$
1122-2017	CONSTRUCTION EXITS (INSTALL) (TY 2)	312	SY	$	$
1122-2019	CONSTRUCTION EXITS (REMOVE)	312	SY	$	$
1122-2037	TEMPORARY SEDIMENT CONTROL FENCE INSTLL	3000	LF	$	$
1122-2048	BIOGRD EROSN CONT LOGS (12" DIA)INSTALL	30	LF	$	$
1122-2056	BIODEGRADBLE EROSION CONTROL LOGS REMOV	30	LF	$	$
1122-2057	TEMPORARY SEDIMENT CONTROL FENCE REMOVE	3000	LF	$	$
	MOBILIZATION (10%)	1	LS	$	$
				BASE BID TOTAL (in figures)	$

In case of DISCREPANCIES, Unit Price RULES OVER Unit Total and Total Amounts.

ADD ON BID 1 - Sugarcane Dr Roadway Improvements					
SPEC NO.	DESCRIPTION	QTY	UNIT	UNIT PRICE (in figures)	UNIT TOTAL (in figures)
0100-2002	PREPARING ROW	21.37	STA	$	$
0110-2001	EXCAVATION (ROADWAY)	5100	CY	$	$
0132-2006	EMBANKMENT (FINAL)(DENS CONT)(TY C)	510	CY	$	$
0164-2023	CELL FBR MLCH SEED(PERM)(RURAL)(CLAY)	2912	SY	$	$
0247-2204	FL BS (CMP IN PLC)(TY E GR 4)(8")	10058	SY	$	$
3000	EN-1 ROADBOND (0.0075 GAL/SY)	78	GAL	$	$
3000	EN-1 TRT (MIX EXST MATL& NEW BASE)(DC)(8")	10293	SY	$	$
0310-2001	PRIME COAT (MC-30)	1804	GAL	$	$
3268-2047	D-GR HMA TY-D SAC-A PG76-22	514	TON	$	$
0530-2010	DRIVEWAYS (CONC)	36	SY	$	$
0530-2011	DRIVEWAYS (ACP)	545	SY	$	$
0560-2011	MAILBOX INSTALL-S (TWG-POST) TY 2 FND	14	EA	$	$
0560-2013	MAILBOX INSTALL-D (TWG-POST) TY 2 FND	1	EA	$	$
0560-2024	MAILBOX INSTALL-M(TWG-POST)TY 2 FND	2	EA	$	$
0644-2001	IN SM RD SN SUP&AM TY10BWG(1)SA(P)	7	EA	$	$
0644-2059	RELOCATE SM RD SN SUP & AM TY TWT	1	EA	$	$
0644-2060	REMOVE SM RD SN SUP & AM	5	EA	$	$
0666-2048	REFL PAV MRK TY I (W) 24"(SLD)(100MIL)	52	LF	$	$
0666-2105	REFL PAV MRK TY I (Y) 4" (BRK)(100MIL)	1180	LF	$	$
0666-2111	REFL PAV MRK TY I (Y) 4" (SLD)(100MIL)	4524	LF	$	$
0672-2015	REFL PAV MRKR TY II-A-A	238	EA	$	$
0666-2054	REFL PAV MRK TY I (W) (ARROW) (100MIL)	10	EA	$	$
1122-2017	CONSTRUCTION EXITS (INSTALL) (TY 2)	312	SY	$	$
1122-2019	CONSTRUCTION EXITS (REMOVE)	312	SY	$	$
1122-2048	BIOGRD EROSN CONT LOGS (12" DIA)INSTALL	60	LF	$	$
1122-2056	BIODEGRADBLE EROSION CONTROL LOGS REMOV	60	LF	$	$
	WATER LINE ADJUSTMENT	1	LS	$	$
	MOBILIZATION (10%)	1	LS	$	$
				ADD ON BID 1 TOTAL (in figures)	$

ADD ON BID 2 - Sidewalk on North Side of Sugarcane Dr					
SPEC NO.	DESCRIPTION	QTY	UNIT	UNIT PRICE (in figures)	UNIT TOTAL (in figures)
0531-2003	CONC SIDEWALKS (5') (6")	1731	LF	$	$
0531-2041	CURB RAMPS (TY 10)	4	EA	$	$
				ADD ON BID 2 TOTAL (in figures)	$

In case of DISCREPANCIES, Unit Price RULES OVER Unit Total and Total Amounts.

CONTINUATION OF BID PAGE

The undersigned **Bidder** agrees to commence work after written notice to commence work and to substantially complete the work on which he has bid **90** calendar days as provided in Article 18 of the General Conditions of the Agreement.

Enclosed with this Proposal is a Cashier's check or Certified Check for _____ _____ Dollars (_____) or a Bid Bond in the Sum of _____ _____ Dollars (_____), which is agreed shall be collected and retained by the **Owner** under the conditions hereof within ten (10) days after the date this proposals is accepted; then otherwise the said bond or check shall be returned to the undersigned upon demand.

Receipts of the following Addenda on these dates shown is acknowledged:

	DATE	ACKNOWLEDGE		DATE	ACKNOWLEDGE
#1	_____	_____	#2	_____	_____
#3	_____	_____	#4	_____	_____

Respectfully submitted,

_____
Name of Firm

By: _____
Signature Date

_____
Title

THIS PROPOSAL MUST BE SIGNED BY AN OFFICER OF REPRESENTATIVE DULY AUTHORIZED BY THE BIDDER.

_____
Address

_____

_____
Telephone Number

(Seal, if Bid is by a Corporation)

Attest: _____

City of Weslaco

BID BOND

KNOW ALL MEN BY THESE PRESENTS, That we, the undersigned _____
_____ as Principal, and _____
_____ as Surety, are hereby held and firmly bound
unto _____ as OWNER in the penal sum of _____
_____

for the payment of which, well and truly to be made, we hereby jointly and severally bind ourselves, successors and assigns.

Signed, this _____ day of _____, 20_____.

The condition of the above obligation is such that whereas the Principal has submitted to _____
_____ a certain BID, attached hereto and hereby made a part hereof to enter into a contract in writing for the
_____
_____
_____
_____

NOW, THEREFORE,

(a) If said Bid shall be rejected, or

(b) If said Bid shall be accepted and the Principal shall execute and deliver a contract in the Form of Contract attached hereto (properly completed in accordance with said BID) and Shall furnish a BOND for his faithful performance of said contract, and for the payment of all persons performing labor or furnishing materials in connection therewith, and shall in all other respects perform the agreement created by the acceptance of said BID, then, this obligation shall be void, otherwise the same shall remain in force and effect; it being expressly understood and agreed that the liability of the Surety for any and all claims hereunder shall, in no event, exceed the penal amount of this obligation is herein stated.

The Surety, for value received, hereby stipulates and agrees that the obligations of said Surety and its BOND shall be in no way impaired or affected by any extension of the time within which the OWNER may accept such Bid; and said Surety does hereby waive notice of any such extension.

THE STATE OF TEXAS §
§
CITY OF WESALCO §

CONSTRUCTION CONTRACT
2013-14-08

This Agreement, entered into this _____ day of _____, 2014 by and between City of Weslaco (hereinafter called the "OWNER," and, _____ (a Texas corporation), of County of Hidalgo, and State of Texas, hereinafter called "CONTRACTOR".

WITNESSETH

That for and in consideration of the payments and agreement hereinafter mentioned, to be made and performed by the OWNER, the CONTRACTOR hereby agrees with the OWNER to commence and complete the construction described as follows:

DETENTION POND AND RECONSTRUCTION OF SUGARCANE DRIVE FROM MILE 6 WEST TO MILE 5 ½ WEST

Hereinafter called the project, for the sum of _____ Dollars and all extra work in connection therewith, under the terms and stated in the General and Special Conditions of the Contract; and at his (its or their) own proper cost and expense to furnish all the materials, supplies, machinery, equipment, tools, superintendence, labor, insurance, and other accessories and services necessary to complete the said project in accordance with the conditions and prices stated in the Proposal, the General Conditions and Special Conditions printed or written explanatory matter thereof, the specifications and contract documents therefore as prepared by **TEDSI Infrastructure Group**, entitled the Architect/Engineer, and as enumerated in Paragraph 1.01.A.12 of the General Conditions, all of which are made a part hereof and collectively evidence and constitute the contract.

The CONTRACTOR hereby agrees to commence work under this contract on or after a date to be specified in written "Notice to Proceed" of the OWNER and to fully complete the project within **90** consecutive calendar days thereafter. The CONTRACTOR further agrees to pay, as liquidated damages, the sum of **$500.00** for each consecutive calendar day thereafter.

The OWNER agrees to pay the CONTRACTOR in current funds for the performance of the contract, subject to additions and deductions, as provided in the General Conditions of the contract, and to make payments on account thereof as provided in Paragraphs 14.02.C and 14.07.C of the General Conditions.

DRAFT

IN WITNESS WHRE OF, the parties to these present have executed this contract in four (6) counterparts, each of which shall be deemed an original, in year and day first above mentioned.

APPROVED BY CITY COMISSION ON **_____,2014 .**

CONTRACTOR:_____
Print Name & Title: _____
Name of Firm: _____
_____
Address: _____
_____
Fed I.D. #/SS #: _____

STATE OF TEXAS

COUNTY OF HIDALGO

This instrument was acknowledged before me on this the _____day of _____,

20__, by _____Of and on behalf of _____
(Title) (A corporation)

_____
Notary Public-Signature

APPROVED AS TO FORM:
Ramon Vela, City Attorney

BY: _____

ATTEST:

_____
Elizabeth Walker, City Secretary

City of Weslaco Mayor:

_____
David Suarez, Mayor

DRAFT

IN WITNESS WHEREOF, the Principal and the Surety have hereunto set their hands and seals, and such of them as are corporations have caused their corporate seals to be hereto affixed and these presents to be signed by their proper officers, the day and year first set forth above.

_____(L.S.)
Principal

_____
Surety

By:_____

IMPORTANT – Surety companies executing BONDS must appear on the Treasury Department's most current list (circular 570 as amended) and be authorized to transact business in the state where the project is located.

NON-COLLUSION AFFIDAVIT OF PRIME BIDDER

State of .....)

County of.……)

_____, being first duly sworn, deposes and says that:

(1) He is _____, of

_____, the Bidder that has submitted the attached Bid;

(2) He is fully informed respecting the preparation and contents of this attached bid and of all pertinent circumstances respecting such bid;

(3) Such bid is genuine and is not a collusive or sham Bid;

(4) Neither the said Bidder nor any of its officers, partners, owners, agents, representative:, employees or parties in interest, including this affiant, has in any way colluded, conspired a collusive or sham Bid in connection with the Contract for which the attaché Bid has been submitted or to refrain from bidding in connection with such Contract, or has in any manner, directly or indirectly, sought by agreement or collusion or communication of conference with any other Bidder, firm or person to fix the price or prices in the attached Bid or of any other Bidder, or to fix any overhead, profit or cost element of the Bid price or the Bid price of any other Bidder, or to secure through any collusion, conspiracy, connivance or unlawful agreement any advantage against the Owner or any person interested in the proposed Contract; and

(5) The price or prices quoted in the attached Bid are fair and proper and are not tainted by any collusion, conspiracy, connivance, connivance or unlawful agreement on the part of the Bidder or any of its agents, representatives, owners, employees, or parties in interest, including this affiant.

(Signed) _____

_____
(Title)

Subscribed and sworn to before me on this _____

Day of _____

_____

_____

Title

PAYMENT BOND

(To be used in Texas under V.A.T.S. 5160)

THE STATE OF _____

CITY OF _____

KNOW ALL MEN BY THESE PRESENTS: That we (1) _____, a (2) _____, hereinafter called Principal and (3)_____ of _____, hereinafter called the Surety, are held and firmly bound unto (4) _____ of _____, hereinafter called Owner, and unto all persons, firms, and corporations who may furnish materials for, or perform labor upon the building or improvements hereinafter referred to the penal sum of _____ ($_____) Dollars in lawful money of the United States to be paid in (5) _____, for the payment of which sum well and truly to be made, we bind ourselves, our heirs, executors, administrators, and successors, jointly and severally, firmly be these presents.

THE CONDITION OF THIS OBLIGATION is such that Whereas, the Principal entered into a certain contract with (6)_____ _____, the Owner, dated the _____ day of _____, A.D. 200__, a copy of which is hereto attached and made a part hereof for the construction of:

DETENTION POND AND RECONSTRUCTION OF SUGARCANE DRIVE FROM MILE 6 WEST TO MILE 5 ½ WEST

These footnotes refer to numbers in body of contract above:

Date of Bond must not be prior to date of contract

(1) Correct name of Contractor
(2) A Corporation, a Partnership or an Individual, as case may be
(3) Correct name of Surety
(4) Correct name of Owner
(5) County and State
(6) Owner

NOW, THEREFORE, the condition of this obligation is such that, if the -1- Principal shall promptly make payment to all claimants as defined in Article 5160 Revised Civil Statutes of Texas, 1925, as amended by House Bill 344, Act 56th Legislature, Regular Session, 1925 effective April 27, 1959, supplying labor and materials in the prosecution of the work provided for in said Contract, then this obligation shall be null and void, otherwise it shall remain in full force and effect.

This bond is made and entered into solely for the prosecution of all claimants supplying labor and material in the prosecution of the work provided for in said Contract, and all such claimants shall have a direct right of action under the bond as provided in Article 5160, Revised Civil Statutes 1925, as amended by House Bill 344, Acts 56th Legislature, Regular Session, 1959

PROVIDED FURTHER, that if any legal action be filed upon this bond, venue shall lie in Hidalgo County, State of Texas, and that the said surety, for value received hereby stipulates and agrees that no change, extension of time, alteration or addition to the terms of the contract or to the work to be performed thereunder or the specification accompanying the same shall in any way affect its obligation on this bond, and it does hereby waive notice of any such change, extension of time, alteration or addition to the terms of the contract or to the work or to the specifications.

PROVIDED FURTHER, that no final settlement between the Owner and the Contractor shall abridge the right of any beneficiary hereunder, whose claim may be unsatisfied.

IN WITNESS WHEREOF, this instrument is executed in six counterparts, each one of which shall be deemed an original, this the _____ day of ____ _____. A.D., 200_____.

ATTEST:

_____
(Principal) Secretary

(Seal)

_____
Witness as to Principal

_____
(Address)

Principal_____
By_____

(Address)_____

Telephone Number:_____

_____
Surety

ATTEST:

_____
(Surety) Secretary

(Seal)

_____
Witness as to Surety

By_____

(Address)_____

_____

NOTE: If Contractor is partnership all Partners should execute bond

Telephone Number:_____

_____
(Address)

PAYMENT BOND FORM

_____ _____
(Individual Principal)

_____ _____
(Address) (Business Address)
Telephone Number:_____ Telephone Number:_____

_____
(Corporate Principal)

_____
(Business Address) (Affix Corporate SEAL)
Telephone Number:_____
BY_____

_____ _____
ATTEST: _____

_____
(Business Address)(Affix Corporate SEAL)

BY_____
Telephone Number:_____

CERTIFICATES AS TO CORPORATE PRINCIPAL

I, _____, certify that I am the _____ Secretary of the corporation named as Principal in the within bond; that _____,who signed the said bond on behalf of the Principal was then _____ of said corporation; and I know his signature, and his signature thereto is genuine; and that said bond was duly signed, sealed, and attested for and in behalf of said corporation by authority of its governing body.

_____
(TITLE)
DATE_____ _____
(AFFIX CORPORATE SEAL)

Telephone Number:_____

The rate of premium on this bond is _____ per thousand. Total amount of premium charge $_____.
(The above must be filled in by corporate surety.) (Power-of-Attorney of person signing for surety company must be attached.)

PERFORMANCE BOND
(To be used in Texas under V.A.T.S. 5160)

THE STATE OF _____

CITY OF _____

KNOW ALL MEN BY THESE PRESENTS: That we (1) _____, a (2) _____ OF _____, hereinafter called Principal and (3)_____ of _____, State of _____, hereinafter called the Surety, are held and firmly bound unto (4) _____ _____ of_____, hereinafter called Owner, in the penal sum of _____ ($_____) Dollars in lawful money of the United States to be paid in (5) _____, for the payment of which sum well and truly to be made, we bind ourselves, our heirs, executors, administrators, and successors, jointly and severally, firmly be these presents.

THE CONDITION OF THIS OBLIGATION is such that Whereas, the Principal entered into a certain contract with (6)_____, the Owner, dated the _____ day of _____, A.D. 200__, a copy of which is hereto attached and made a part hereof for the construction of:

DETENTION POND AND RECONSTRUCTION OF SUGARCANE DRIVE FROM MILE 6 WEST TO MILE 5 ½ WEST

hereinafter called the "Work").

These footnotes refer to the numbers in body of contract above:

Date of Bond must not be prior to date of contract
(1) Correct name of Contractor
(2) A Corporation, a Partnership or an Individual, as case may be
(3) Correct name of Surety
(4) Correct name of Owner
(5) County and State
(6) Owner
(Texas Performance Bond) – Page 2.

NOW, THEREFORE, if the Principal shall well, truly and faithfully perform the work in accordance with the plans, specifications, and contract documents during the original term thereof, and any extensions thereof which may be granted by the Owner, with or without notice to the Surety, and if he shall satisfy all claims and demands incurred under such contract, and shall fully indemnify and save harmless the Owner from all costs and damages which it may suffer by reason of failure to do so, and shall reimburse and repay the Owner all outlay and expense which the Owner may incur in making good any default, then this obligation shall be void; otherwise to remain in full force and effect.

PROVIDED FURTHER, that if any legal action be filed upon this bond, venue shall lie in Hidalgo County, State of Texas, and that the said surety, for value received hereby stipulates and agrees that no change, extension

of time, alteration or addition to the terms of the contract or to the work to be performed thereunder or the specifications accompanying the same shall in any way affect its obligation on this bond, and it does hereby waive notice of any such change, extension of time, alternation or addition to the terms of the contract or to the work or to the specifications.

IN WITNESS WHEREOF, this instrument is executed in six counterparts, each one of which shall be deemed an original, this the _____ day of ____ _____. A.D.

ATTEST:

Principal_____

_____ By_____

(Principal) Secretary

(Seal) (Address)_____

_____ Telephone Number:_____

Witness as to Principal

_____

(Address)

ATTEST:

_____ By_____

(Surety) Secretary

(Seal) (Address)_____

_____ Telephone Number:_____

Witness as to Surety

_____

(Address)

NOTE: If Contractor is a partnership, all partners should execute bond.

PERFORMANCE-PAYMENT BOND FORM

_____ _____
(Individual Principal)

_____ _____
(Address) (Business Address)
Telephone Number:_____ Telephone Number:_____

_____
(Corporate Principal)

_____
(Business Address) (Affix Corporate SEAL)
Telephone Number:_____
BY_____

_____ _____
ATTEST: _____

_____
(Business Address)(Affix Corporate SEAL)

BY_____
Telephone Number:_____

CERTIFICATES AS TO CORPORATE PRINCIPAL

I, _____, certify that I am the _____ Secretary of the corporation named as Principal in the within bond; that _____,who signed the said bond on behalf of the Principal was then _____ of said corporation; and I know his signature, and his signature thereto is genuine; and that said bond was duly signed, sealed, and attested for and in behalf of said corporation by authority of its governing body.

_____
(TITLE)
DATE_____ _____
(AFFIX CORPORATE SEAL)

Telephone Number:_____

The rate of premium on this bond is _____ per thousand. Total amount of premium charge $_____.
(The above must be filled in by corporate surety.) (Power-of-Attorney of person signing for surety company must be attached.)

EXHIBIT "C"
Insurance Requirements

The Bidder awarded the contract shall furnish proof of insurance, which will also include any subcontractor that is subcontracted by the bidder in at least the following limits, to be in place prior to providing any services under this Contract and to continue at all times in force in effect during the term of this Contract:

1. A Five Hundred Thousand Dollar ($500,000.00) Comprehensive General Liability insurance policy providing additional coverage to all underlying liabilities of City.

2. Automobile liability insurance policy with limits of at least Three Hundred Thousand Dollars ($300,000.00) per person and Five Hundred Thousand Dollars ($500,000.00) per occurrence. Coverage should include injury to or death of persons and property damage claims with limits up to Five Hundred Thousand ($500,000.00) arising out of the services provided to City hereunder.

3. Uninsured/Underinsured motorist coverage in an amount equal to the bodily injury limits set forth immediately above;

4. Workers compensation insurance in amounts established by Texas law, unless the Bidder is specifically exempted from the Texas Workers Compensation Act, Texas Labor Code Chapter 401, et. seq.

Certificates of insurance naming City as an additional insured shall be submitted to City for approval prior to any services being performed by Contractor. Each policy of insurance required hereunder shall extend for a period equivalent to, or longer than the term of the Contract, and any insurer hereunder shall be required to give at least thirty (30) days written notice to the City prior to the cancellation of any such coverage on the termination date, or otherwise. This Contract shall be automatically suspended upon the cancellation, or other termination, of any required policy of insurance hereunder, and such suspension shall continue until evidence adequate replacement coverage is provided to the City. If replacement coverage is not provided within thirty (30) days following suspension of the Contract, this Contract shall automatically terminate.

Insurance Requirement Acknowledgment

I, _____, authorized representative for _____,
Company/Vendor

hereby acknowledge receipt of the City's required insurance limits. Said requirements:

☐ will be acquired within 10 working days after notification from Purchasing Department of bid awarded by the City of Weslaco;

☐ will acquire additional amounts required to meet the City's requirements within 10 working days after notification from Purchasing Department of bid award by City of Weslaco; currently carry the following:

Automobile Liability: $_____ General Liability: $

☐ have already been met, see attached copy of insurance certificate.

_____ _____.
Authorized Representative Date

<u>Notice to Bidder</u>:
A certificate of insurance for the required insurance limits shall be provided to the Purchasing Department's Contract Managers in order to qualify for award of bid and to execute a contract between your Company and the City.

Failure to provide Certificates of Insurance to the Purchasing Department's Contract Managers will cause the bid award to be rescinded and re-awarded to next lowest bidder. Certificates of Insurance will be monitored and verified on a **quarterly basis** to ensure coverage policy is in place. It is the Company=s obligation to maintain the appropriate insurance coverage throughout the term of the contract.

THIS FORM MUST ACCOMPANY BID PACKET

PROJECT REQUIREMENTS ACKNOWLEDGMENT

This is to certify that I, _____, possess all of the APPLICABLE:

1. Licenses: _____.
2. Bonds: _____.
3. Certificates: _____.
4. Permits: _____.
5. Other: _____.

necessary to carry out the required project. Furthermore, I am providing copies of the required documentation so that, if my company is awarded this bid, I may be eligible to enter into a contract with City of Weslaco and proceed to complete the project in a timely manner.

* Any licenses, bonds, certificates, permits, etc. which are required <u>must be presented</u> as part of the bid packet in order to expedite the bid evaluation process. Failure to provide said documentation will result in the disqualification of your bid.

_____ _____.

Authorized Signature Date

_____.

Company

_____.

Address

_____.

City, State, Zip

ACORD — CERTIFICATE OF INSURANCE

DATE (MM/DD/YY)

PRODUCER

THIS CERTIFICATE IS ISSUED AS A MATTER OF INFORMATION ONLY AND CONFERS NO RIGHTS UPON THE CERTIFICATE HOLDER. THIS CERTIFICATE DOES NOT AMEND, EXTEND OR ALTER THE COVERAGE AFFORDED BY THE POLICIES BELOW.

INSURED

INSURERS AFFORDING COVERAGE

INSURER A:

INSURER B:

INSURER C:

INSURER D:

INSURER E:

COVERAGES

THE POLICIES OF INSURANCE LISTED BELOW HAVE BEEN ISSUED TO THE INSURED NAMED ABOVE FOR THE POLICY PERIOD INDICATED. NOTWITHSTANDING ANY REQUIREMENT, TERM OR CONDITION OF ANY CONTRACT OR OTHER DOCUMENT WITH RESPECT TO WHICH THIS CERTIFICATE MAY BE ISSUED OR MAY PERTAIN, THE INSURANCE AFFORDED BY THE POLICIES DESCRIBED HEREIN IS SUBJECT TO ALL THER TERMS, EXCLUSIONS AND CONDITIONS OF SUCH POLICIES. AGGREGATE LIMITS SHOWN MAY HAVE BEEN REDUCED BY PAID CLAIMS.

INSR LTR	TYPE OF INSURANCE	POLICY NUMBER	POLICY EFFECTIVE DATE (MM/DD/YY)	POLICY EXPIRATION DATE (MM/DD/YY)	LIMITS	
A	**GENERAL LIABILITY** ☐ COMMERCIAL GENERAL LIABILITY ☐ CLAIMS MADE ☐ OCCUR ☐ OWNER'S & CONT. PROT ☐ OWNER'S PROTECTIVE LIABILITY GEN'L AGGREGATE LIMIT APPLIES PER: ☐ POLICY ☐ PROJECT ☐ LOC				EACH OCCURRENCE	$
					FIRE DAMAGE (Any one fire)	$
					MED EXP (Any one person)	$
					PERS & ADV INJURY	$
					GENERAL AGGREGATE	$
					PRODUCTS – COMP/OP AGG	$
B	**AUTOMOBILE LIABILITY** ☐ ANY AUTO ☐ ALL OWNED AUTOS ☐ SCHEDULED AUTOS ☐ HIRED AUTOS ☐ NON-OWNED AUTOS ☐ _____				COMBINED SINGLE LIMIT (Ea accident)	$
					BODILY INJURY (Per person)	$
					BODILY INJURY (Per accident)	$
					PROPERTY DAMAGE (Per accident)	$
	GARAGE LIABILITY ☐ ANY AUTO				AUTO ONLY-EA ACCIDENT	$
					OTHER THAN AUTO ONLY EA ACC	$
					AGG	$
C	**EXCESS LIABILITY** ☐ OCCUR ☐ CLAIMS MADE ☐ DEDUCTIBLE ☐ RETENTION $				EACH OCCURENCE	$
					AGGREGATE	$
						$
						$
						$
D	**WORKERS COMPENSATION AND EMPLOYER'S LIABILITY**				WC STATU-TORY LIMITS ☐ OTHER	
					E.L. EACH ACCIDENT	$
					E.L. DISEASE-EA EMPLOYEE	$
					E.L. DISEASE-POLICY LIMIT	$
	OTHER					

DESCRIPTION OF OPERATIONS / LOCATION / VEHICLES / EXCLUSIONS ADDED BY ENDORSEMENT / SPECIAL PROVISIONS

City of Weslaco shall be named as additional insured on all Commercial General Liability policies.

CERTIFICATE HOLDER

ADDITIONAL INSURED; INSURER LETTER: _____

CANCELLATION

Attn: Purchasing Department

SHOULD ANY OF THE ABOVE DESCRIBED POLICIES BY CANCELLED BEFORE THE EXPIRATION DATE THEREOF, THE ISSUING INSURER WILL ENDEAVOR TO MAIL ***30*** DAYS WRITTEN NOTICE TO THE CERTIFICATE HOLDER NAMED TO THE LEFT, BUT FAILURE TO DO SO SHALL IMPOSE NO OBLIGATION OR LIABILITY OF ANY KIND UPON THE INSURER, ITS AGENTS OR REPRESENTATIVES.

AUTHORIZED REPRESENTATIVE

SAMPLE

GENERAL CONDITIONS OF THE AGREEMENT

1. GENERAL

It is the intent of these instructions, plans and specifications to provide guidance for the construction of this project.

2. REGULATIONS AND DISCREPANCIES

All applicable laws, ordinances, policy, rules, regulations and other directives of all authorities having jurisdiction over the projects shall apply to the contract throughout and will be deemed to be included in the contract the same as those written out in full. Discrepancies between regulations or conflicting parts of the Specifications shall be brought to the attention of an clarified by the Engineer before proceeding with any work. Proceeding with affected work without instructions from the Engineer can result in the Contractor being responsible for taking the necessary steps to insure the work conforms to the governing regulation.

3. ENGINEER

Whenever the work "ENGINEER" is used in this contract with reference to the preparation of plans, specifications, and contract documents, it shall be understood as referring to the firm **TEDSI Infrastructure Group**.

4. INTERPRETATION OF PHRASES

Whenever the words "Directed", "Required", "Permitted", "Designated", "Considered Necessary", "Prescribed", or words of like importance are used, it shall be understood that the direction, requirements, permission, order, designation or prescription, of the ENGINEER is intended and similarly, the words "Approval", "Acceptable", "Satisfactory", or words of like importance shall mean approved by or acceptable of satisfactory to the ENGINEER. The preceeding to the contrary notwithstanding, Engineer's approval or acceptance of the work shall by advisory to OWNER, and shall not bind the OWNER to accept or approve the same.

Whenever, in the specifications or drawings accompanying this agreement, the terms or description of various qualities relative to finish, workmanship, or other qualities of similar kind which cannot,, from their nature, be specifically and clearly described and specified, but are necessarily described in general terms, then, in all such cases, any question of the fulfillment of said specifications shall be decided by the ENGINEER, and said work shall be done in accordance with his interpretations of the meaning of the words, terms, or clauses defining the character of the work.

Title 29 - LABOR

Subtitle A - Office of the Secretary of Labor

PART 3 - CONTRACTORS AND SUBCONTRACTORS ON PUBLIC BUILDING OR PUBLIC WORK FINANCED IN WHOLE OR IN PART BY LOANS OR GRANTS FROM THE UNITED STATES

Sec.
3.1 Purpose and scope
3.2 Definitions
3.3 Weekly statement with respect to payment of wages
3.4 Submission of weekly statements and the preservation and inspection of weekly payroll records.
3.5 Payroll deductions permissible without application to or approval of the Secretary of Labor.
3.6 Payroll deductions permissible with the approval of the Secretary of Labor.
3.7 Applications for the approval of the Secretary of Labor
3.8 Action by the Secretary of Labor upon applications.
3.9 Prohibited payroll deductions.
3.10 Methods of payment of wages.
3.11 Regulations part of contract.

AUTHORITY: The provisions of this Part 3 issued under R.S. 16 1, sec. 2, 48 Stat. §48; Reorg. Plan No. 14 of 1950, 64 Stat. 1267, 5 U.S.C. Appendix; 5 U.S.C. 301; 40 U.S.C. 276c.

SOURCE: The provisions of this Part 3 appear at 29 F.R. 97, Jan. 4, 1964, unless otherwise noted.

Section 3.1 Purpose and Scope.

This part prescribes "anti-kickback" regulations under section 2 of the Act of June 13, 1934, as amended (40 U.S.C. 276c), popularly known as the Copeland Act. This part applies to any contract which is subject to Federal wage standards and which is for the construction, prosecution, completion, or repair of public buildings, public works or buildings or works financed in whole or in part by loans or grants from the United States. The part is intended to aid in the enforcement of the minimum wage provisions of the Davis-Bacon Act and the various statutes dealing with Federally assisted construction that contain similar minimum wage provisions, including those provisions which are not subject to Reorganization Plan No. 14 (e.g., the College Housing Act of 1950, the Federal Water Pollution Control Act, and the Housing Act of 1959), and in the enforcement of the overtime provisions of the Contract Work Hours Standards Act whenever they are applicable to construction work. The part details the obligation of contractors and subcontractors relative to the weekly submission of statements regarding the wages paid on work covered thereby; sets forth the circumstances and procedures governing the making of payroll deductions from the wages of those employed on such work; and delineates the methods of payment permissible on such work.

Section 3.2 Definitions.

As used in the regulations in this part:

(a) The terms "building" or "work" generally include construction activity as distinguished from manufacturing, furnishing of materials, or servicing and maintenance work. The terms include, without limitation, buildings, structures, and improvements of all @s, such as bridges, dams, plants, highways, parkways, streets, subways, tunnels, sewers, mains, powerlines, pumping stations, railways, airports, terminals, docks, piers, wharves, ways, lighthouses, buoys, jetties, breakwaters, levees, and canals; dredging, shoring, scaffolding, drilling, blasting, excavating, clearing, and landscaping. Unless conducted in connection with and at the site of such a building or work as is described in the foregoing sentence, the manufacture or furnishing of materials, articles, supplies, or equipment (whether or not a Federal or State agency acquires title to such materials,

articles, supplies, or equipment during the course of the manufacture or furnishing, or owns the materials from which they are manufactured or furnished) is not a "building" or "work" within the meaning of the regulations in this part.

(b) The terms construction," 4; prosecution," @'completion," or repair" mean all types of work done on a particular building or work at the site thereof, including, without limitation, altering, remodeling, painting and decorating, the transporting of materials and supplies to or from the building or work by the employees of the construction contractor or construction subcontractor, and the manufacturing or furnishing of materials, articles, supplies, or equipment on the site of the building or work, by persons employed at the site by the contractor or subcontractor.

(c) The terms "public building" or "public work" include building or work for whose construction, prosecution, completion, or repair, as defined above, a Federal agency is a contracting party, regardless of whether title thereof is in a Federal agency.

(d) The term "building or work financed in whole or in part by loans or grants from the Unites States" includes building or work for whose construction, prosecution, completion, or repair, as defined above, payment or part payment is made directive or indirectly from funds provided by loans or grants by a Federal agency. The term includes building or work for which the Federal assistance granted is in the form of loan guarantees or insurance.

(e) Every person paid by a contractor or subcontractor in any manner for his labor in the construction, prosecution, completion, or repair of a public building or public work or building or work financed in whole or in part by loans or grants from the United States is "employed" and receiving 44 wages," regardless of any contractual relationship alleged to exist between him and the real employer.

(f) The term "any affiliated person" includes a spouse, child, parent, or other close relative of the contractor or subcontractor; a partner or officer of the contractor or subcontractor; a corporation closely connected with the contractor or subcontractor as parent, subsidiary or otherwise, and an officer or agent of such corporation.

(g) The term "Federal agency" means the United States, the District of Columbia, and all executive departments, independent establishments, administrative agencies, and instrumentality's of the United States and of the District of Columbia, including corporations. all or substantially all of the stock of which is beneficially owned by the United States, by the District of Columbia, or any of the foregoing departments, establishments, agencies, and instrumentality's.

(29 **FR** 97, **Jan. 4, 1964, as amended at** 33 **FR** 32575, **Nov.** 27, 1973)

Section 3.3 Weekly statement with respect to payment of wages.

(a) As used in this section, the term "employee" shall not apply to persons in classifications higher than that of laborer or mechanic and those who are the immediate supervisors of such employees.

(b) Each contractor or subcontractor engaged in the construction, prosecution, completion, or repair of any public building or public work, or building or work financed in whole or in part by loans or grants from the United States, shall furnish each week a statement with respect to the wages paid each of its employees engaged on work covered by 29 CFR Parts 3 and 5 during the preceding weekly payroll period. This statement shall be executed by the contractor or subcontractor or by an authorized officer of employee of the contractor or subcontractor who supervises the payment of wages, and shall be on form @ 348, "Statement of Compliance," or on an identical form on the back of @ 347, "Payroll (For Contractors Optional Use)" or on any form with identical wording. Sample copies of @ 347 and @ 348 may be obtained from the Government contracting or sponsoring agency, and copies of these forms may be purchased at the Government Printing Office.

(c) The requirements of this section shall not apply to any contract of $2,000 or less.

(d) Upon a written finding by the head of a Federal agency, the Secretary of Labor may provide reasonable limitations, variations, tolerances, and exemptions from the requirements of this section subject to such conditions as the Secretary of Labor may specify.

(29 F.R. 95, Jan. 4, 19(A, as ==tied at 33 F.R. 10186, July 17,1968)

Copeland Act Regulations

Section 3.4 Submission of weekly statements and the preservation and inspection of weekly payroll records.

(a) Each weekly statement required under §3.3 shall be delivered by the contractor or subcontractor, within seven days after the regular payment date of the payroll period, to a representative of a Federal or State agency in charge at the site of the building or work, or if there is no representative of a Federal or State agency at the site of the building or work, the statement shall be mailed by the contractor or

subcontractor, within such time, to a Federal or State agency contracting for or financing the building or work. After such examination and check as may be made, such statement, or a copy thereof, shall be kept available, or shall be transmitted together with a report of any violation, in accordance with applicable procedures prescribed by the United States Department of Labor.

(b) Each contractor or subcontractor shall preserve his weekly payroll records for a period of three years from date of completion of the contract. The payroll records shall set out accurately and completely the name and address of each taborer and mechanic, his correct classification, rate of pay, daily and weekly number of hours worked, deductions made, and actual wages paid. Such payroll records shall be made available at all times for inspection by the contracting officer or his authorized representative, and by authorized representatives of the Department of Labor.

Section 3.5 Payroll deductions permissible without application to or approval of the Secretary of Labor.

Deductions made under the circumstances or in the situations described in the paragraphs of this section may be made without application to and approval of the Secretary of Labor:

(a) Any deduction made in compliance with the requirements of Federal, State, or local law, such as Federal or State withholding income taxes and Federal social security taxes.

(b) Any deduction of sums previously paid to the employee as a bona fide prepayment of wages when such prepayment is made without discount or interest. A "bona fide prepayment of wages" is considered to have been made only when cash or its equivalent has been advanced to the person employed in such manner as to give him complete freedom of disposition of the advanced funds.

(c) Any deduction of amounts required by court process to be paid to another, unless, the deduction is in favor of the contractor, subcontractor or any affiliated person, or when collusion or collaboration exists.

(d) Any deduction constituting a contribution on behalf of the person employed to funds established by the employer or representatives of employees, or both, for the purpose of providing either from principal or income, or both, medical or hospital care, pensions, or annuities on retirement, death benefits, compensation for injuries, illness, accidents, sickness,

(k) Any deduction for the cost of safety equipment of nominal value purchased by the

or disability, or for insurance to provide any of the foregoing, or unemployment benefits, vacation pay, savings accounts, or similar payments for the benefit of employees, their families and dependents: Provided, however, That the following standards are met: (1) The deduction is not otherwise prohibited by law; (2) it is either: (i) Voluntarily consented to by the employee in writing and in advance of the period in which the work is to be done and such consent is not a condition either for the obtaining of or for the continuation of employment, or (ii) provided for in a bona fide collective bargaining agreement between the contractor or subcontractor and representatives of its employees; (3) no profit or other benefit is otherwise obtained, directly or indirectly, by the contractor or subcontractor or any affiliated person in the form of commission, dividend, or otherwise; and (4) the deductions shall serve the convenience and interest of the employee. (e) Any deduction contributing toward the purchase of United States Defense Stamps and Bonds when voluntarily authorized by the employee.

(f) Any deduction requested by the employee to enable him to repay loans to or to purchase shares in credit unions organized and operated in accordance with Federal and State credit union statutes.

(g) Any deduction voluntarily authorized by the employee for the making of contributions to

governmental or quasi-governmental agencies, such as the American Red Cross.

(h) Any deduction voluntarily authorized by the employee for the making of contributions to Community Chests, United Givers Funds, and similar charitable organizations.

(i) Any deductions to pay regular union initiation fees and membership dues, not including fines or special assessments: Provided, however, That a collective bargaining agreement between the contractor or subcontractor and representatives of its employees provides for such deductions and the deductions are not otherwise prohibited by law.

0) Any deduction not more than for the "reasonable cost" of board, lodging, or other facilities meeting the requirements of section 3(m) of the Fair Labor Standards Act of 1938, as amended, and Part 531 of this title. When such a deduction is made the additional records required under §516.27(a) of this title shall be kept.

employee as his own prope@ for his personal protection in his work, such as safety shoes, safety

glasses, safety gloves, and hard hats, if such equipment is not required by law to be furnish by the employer, if such deduction is not violative of the Fair Labor Standards Act or prohibited by other law, if the cost on which the deduction is based does not exceed the actual cost to the employer where the equipment is purchased from him and does not include any direct or indirect monetary return to the employer where the equipment is purchased from a third person, and if the deduction is either (1) voluntarily consented to be the employee in writing and in advance of the period in which the work is to be done and such consent is not a condition either for the obtaining of employment or its continuance; or (2) provided for in a bona fide collective bargaining agreement between the contractor or subcontractor and representatives of its employees.
(36 F.R. 9770, May 28,1971.)

Section 3.6 Payroll deductions permissible with the approval of the Secretary of Labor.

Any contractor or subcontractor may apply to the Secretary of Labor for permission to make any

deduction not permitted under §3.5. The Secretary may grant permission whenever he finds that:

(a) The contractor, subcontractor, or any affiliated person does not make a profit or benefit

directly or indirectly from the deduction either in the form of **a** commission, dividend, or otherwise;

(b) The deduction is not otherwise prohibited by law;

(c) The deduction is either (1) voluntarily consented to by the employee **in** writing and in advance of the period in which the work is to be done and such consent is not a condition either for the obtaining of employment or its continuance, or (2) provided for in **a** bona **fide** collective bargaining agreement between the contractor or subcontractor and representatives of its employees; and

(d) The deduction serves the convenience and interest of the employee.

Section 3.7 Applications for the approval of the Secretary of Labor.

Any application for the making of payroll deductions under §3.6 shall comply with the requirements prescribed in the following paragraphs of this section:

(a) The application shall be in writing and shall be addressed to the Secretary of Labor.

(b) The application need not identify the contract or contracts under which the work in question is to be performed. Permission will be given for deductions on all current and future contracts of the applicant for a period of I year. A renewal of permission to make such payroll deduction will be granted upon the submission of an application which makes reference to the original application, recites the date of the Secretary of Labor's approval of such deductions, states affirmatively that there is continued compliance with the standards set forth in the provisions of §3.6, and specifies any conditions which have changed in regard to the payroll deductions.
(36 F.IL 9770, May 29, 1971.)

(c) The application shall state affirmatively that there is compliance with the standards set forth in the provisions of §3.6. The affirmation shall be accompanied by a full statement of the facts indicating such compliance.

(d) The application shall include a description of the proposed deduction, the purpose to be served there by, and the classes of laborers or mechanics from whose wages the proposed deduction would be made.

(e) The application shall state the name and business of any third person to whom any funds obtained from the proposed deductions are to be transmitted and the affiliation of such person, if any, with the applicant. -

Section 3.8 Action by the Secretary of Labor upon applications.

The Secretary of Labor shall decide whether or not the requested deduction is permissible under provisions of §3.6; and shall notify the applicant in writing of his decision.

Section 3.9 Prohibited payroll deductions.

Deductions not elsewhere provided for by this part and which **are** not found to be permissible under §3.6 are prohibited.

Section 3.10 Methods of payment of wages.

The payment of wages shall be by cash, negotiable instruments pkvable on demand, or the additional forms of compensation for which deductions are permissible under this part. No other methods of payment shall be recognized on work subject to the Copeland Act.

Section 3.11 Regulations part of contact.

All contracts made with respect to the construction, prosecution, completion, or repair of any public building or public work or building or work financed in whole or in part by loans or grants from the United States covered by the regulations in this part shall expressly bind the contractor or subcontractor to comply with such of the regulations in this part as may be applicable. In this regard, see §5.5(a) of this subtitle.

SUPPLEMENTAL GENERAL CONDITIONS

These Supplementary Conditions amend or supplement the Standard General Conditions of the Construction Contract (No. 1910-8, 1996 Edition) and other provisions of the Contract Documents as indicated below. All provisions, which are not so amended or supplemental, remain in full force and effect.

The terms used in these Supplementary Conditions will have the meanings indicated in the General Conditions. Additional terms used in these Supplementary Conditions have the meanings indicated below, which are applicable to both the singular and plural thereof.

SC-6.10 Delete paragraph 6.10 in its entirely and insert the following in its place:

The owner qualifies for the state and local tax exemption in the purchase of certain materials and equipment the Contractor shall utilize the form provided herewith in exhibit "D".

SC-11.01 Delete paragraph 11.01 in its entirety.

SC-11.02 Delete paragraph 11.02 in its entirety.

SC-12.01B.25 & B.3. Delete paragraph 12.01B.2 & B.3 in its entirety.

SC-12.01.C.2 Delete paragraph 12.01.C.2 in its entirety.

SC Article 14.02 C.1 Replace **"Ten days"** with **"Thirty days"** to read as follows: Thirty days after presentation of the Application for Payment to OWNER with ENGINEER'S recommendation, the amount recommended will (subject to the provisions of paragraph 14.02.D) become due, and when due will be paid by OWNER TO CONTRACTOR.

SC Article 16 Add the following language at the end of the paragraph of Article 16:

There are no dispute resolution methods and procedures set forth in the Supplemental Conditions:

GENERAL PREVAILING WAGE LEGAL REQUIREMENTS

The Contractor's attention is called to Texas Government Code Chapter 2258, which must be complied with attached herewith as Exhibit "C"

GENERAL NOTES

County: Hidalgo

Highway: Sugarcane (Mile 9 North)

GENERAL NOTES:

For all pits or quarries, comply with the "Texas Aggregate Quarry and Pit Safety Act."

Provide on a weekly basis a list of equipment, including idle equipment, utilized on the project that week.

The 1-800 call services for utility locations do not include TxDOT facilities. Contact the Pharr District Signal Section (956-702-6225) for coordination regarding TxDOT underground lines.

ITEM 5: Control of the Work

Prior to contract letting, bidders may obtain a free computer diskette or a computerized transfer of files (from the Engineer's office) that contains the earthwork information. If copies of the actual cross-sections in additional to, or instead of, the diskette are requested, they will be available at the Engineers office for borrowing by copying companies for the purpose of making copies for the bidder at the bidders expense.

ITEM 8: Prosecution and Progress

Where road closures or detours around structures are necessary to accomplish proposed work, the removal of existing structures and/or cutting of existing pavement will not be permitted until all pre-cast members for the proposed structure have been cast, tested and approved for use.

Working days will be computed and charged in accordance with Article 8.3.A.6 defined as follows:

Upon issuance of written authorization to begin work, all of Item 100, "Preparing Right of Way" will commence. Item 100 work shall be completed before work begins on other items, unless otherwise authorized by the project engineer. Item 100 will be charged in accordance with Article 8.3.A.1, Five-Day Workweek.

Work and time charges will continue until completion of Item 100. Upon completion of Item 100, work and time charges will stop for a maximum period of 120 days for utility work to be completed. Time charges in accordance with Article 8.3.A.1 will resume at the end of the 120 day utility work period or earlier if mutually agreed in writing by the engineer and contractor.

ITEM 100: Preparing Right of Way

Preparation of ROW will be done in accordance with the construction phasing shown on the Traffic Control Plans. Performance of this item will not be allowed outside of the project's current construction phase without prior approval by the Engineer.

County: Hidalgo

Highway: Sugarcane (Mile 9 North)

ITEM 132: Embankment

Embankment (DENS CONT) shall be Type C with a max. PI of 40. Material used as embankment material in the top two feet below the bottom of Flexible Base shall meet the following requirements based on preliminary tests and such other tests found necessary by the Engineer.

1. The material shall be such as to produce a well-bonded embankment and shall have a minimum PI of 8 and a maximum PI of 30.

It is the Contractor's responsibility to advise the Engineer of the location of the source sufficiently in advance to avoid delay.

ITEM 134: Backfilling Pavement Edges

Backfill Ty A shall not contain particles more than two inches in size and shall have a minimum PI of 10 and a maximum PI of 20.

Any additional backfill material necessary due to pre-existing edge conditions or to replace existing fill removed during blading operations will not be paid for directly. It will be considered subsidiary to this bid item.

ITEM 164: Seeding for Erosion Control

Warm Season Grasses shall be included as part of Item 164 (See Table 3 and/or Table 4 in the Standard Specification Manual for dates and seed type).

Seed mixture shall be as specified under Item 164.

ITEM 166: Fertilizer

Fertilizer rate is based on a rate of 100 Lbs. of Nitrogen per acre. The Nitrogen-Phosphorous-Potassium (NPK) ratio shall include a minimum of 5 percent phosphorous and 5 percent Potassium. Fertilizer shall be homogenized.

ITEM 247: Flexible Base

Flexible Base Type E will be composed of caliche (argillaceous Limestone, calcareous or calcareous clay particles) and may contain stone, conglomerate, gravel, sand or granular materials when these materials are in situ with the caliche.

Flexible Base (TY E GR 4) or (TY D GR 4) crushed concrete shall conform to the following requirements:

County: Hidalgo

Highway: Sugarcane (Mile 9 North)

Retained on Sq. Sieve	Percent Retained
2”	0
½”	20-60
No. 4	40-75
No. 40	70-90
Max. PI:	15
Max. Wet Ball PI:	15
Wet Ball Mill Max Amount:	50
Min. Comp. Strength PSI:	150 at 15 PSI lateral pressure
Triaxial Test	Tex-117-E

The Wet Ball Test (Tex-116-E) shall be run and the Plasticity Index of the material passing the No. 40 sieve shall be determined (Wet Ball PI).

Two (2) percent lime (by weight) will be incorporated into the Flexible Base in the field at the State's expense in accordance with the provisions of Items 260.

The percent of density as determined by Compaction Ratio (Tex-113-E) for the new Flexible Base shall be a minimum of 98%.

The Contractor's attention is called to the fact that certain existing and/or proposed structures may be within the limits of the Flexible Base. It shall be the Contractor's responsibility to perform construction operations without damage to these structures.

For water added under Item 247, the sulfate content will not exceed 3000-ppm and the chloride content will not exceed 3000-ppm.

ITEM 260: Lime Treatment (Road Mixed)

The Contractor's attention is called to the fact that certain existing and/or proposed structures are within the limits of the lime-treated Subgrade. Unless otherwise directed by the Engineer, these structures shall be installed before the final rolling of this Subgrade. It shall be the Contractor's responsibility to perform the proper lime treating operation without damage to these structures.

The slurry method of applying lime will be required, except when the lime is to be added to naturally wet materials as directed by the Engineer.

For this project, the Engineer will direct a random number of lime trucks to be check weighed.

The percent of density as determined by Tex-121-E for the new and salvage Flexible Base shall be a minimum of 98% for all courses.

County: Hidalgo

Highway: Sugarcane (Mile 9 North)

ITEM 300: Asphalts, Oils and Emulsions

Temporary ramps/detours and driveways may use performance grade binder 64-22.

ITEM 310: Prime Coat (Cutback Asphaltic Material)

The Contractor shall exercise diligence in the application of asphalt by the use of flagging and rolling procedures to keep from spraying or splattering the traveling public with asphaltic material.

ITEM 316: Surface Treatments

In addition to cleaning by brooming of paved surfaces to be sealed as required by this Item, blading may also be necessary to clean dirt and grass from edges of the pavement and/or turnout areas. The cost of this blading will not be paid for directly, but will be considered subsidiary to the various bid Items of the project.

ITEM 400: Excavation and Backfill for Structures

If the Contractor elects to cut pavement (existing/detour) for structural work beyond that required by the construction phasing shown in the plans and approved by the Engineer, it shall be restored at his expense and backfilled to its original condition or better in accordance with Item 400.

Unless shown otherwise in the plans, use a 1-ft depth for Item 400 Structural Excavation (Special) for gravel bedding needed below drainage structures with unstable material.

ITEM 420: Concrete Structures

Use membrane curing, Type 2, for concrete curb, gutter and combined curb and gutter, concrete medians, directional islands and sidewalks.

ITEM 464: Reinforced Concrete Pipe

Use tongue and groove pipe where the RCP extends into the lime treated subgrade. The 4-foot depth restriction for heavy equipment passage over pipe structures is voided. The Contractor will be responsible for any construction damage to these facilities.

Do not use mortar joints.

All reinforced concrete pipe shall include rubber gaskets unless shown otherwise on the plans or directed by the engineer.

County: Hidalgo

Highway: Sugarcane (Mile 9 North)

ITEM 502: Barricades, Signs and Traffic Handling

Replace/relocate all regulatory signs removed due to construction operations with the same sign on fixed support(s) immediately upon its removal. First obtain project Engineer approval before removing any regulatory roadway sign. Required flaggers are to be available to direct traffic during sign intermediate down time.

Relocate any Directional Sign Assemblies removed during construction operations immediately upon their removal.

These signs shall be relocated to a location in accordance with the Latest Version of the "Texas Manual on Uniform Traffic Control Devices". In no case will a sign be removed without a replacement sign and support(s) being readily available and a location established. Removal and relocation of these signs required for traffic control will not be paid for directly, but shall be considered subsidiary to Item 502.

From the beginning to the end of the project, all traffic control devices need to be in acceptable condition as per the Texas Quality Guidelines for Work Zone Traffic Control Devices.

For this project a field office will not be required at the project site.

ITEM 529: Concrete Curb, Gutter and Combined Curb and Gutter

Before final acceptance of the project, remove discoloration caused by tire marks, mud, asphalt, paint or other similar material by any method satisfactory to the Engineer to achieve a uniform color and texture of the finished surface exposed to view.

ITEM 530: Public & Private Driveways

Public and private driveways need to have a smooth vertical transition between the proposed driveway and the existing driveway. The contractor is to add a vertical taper if needed which will be subsidiary to Item 530.

ITEM 531: Sidewalks

Construct ¼-inch thick score joints at a maximum 6-foot spacing and expansion joints at a maximum 30-foot spacing. Construct a joint in the center of the sidewalk if it is over 15-feet wide. For steel reinforcement, use 6x6-inch spacing with #3 bars or 6x6 – D6 welded wire fabric.

ITEMS 636: Aluminum Signs

Complete sign blanks and panels shall be handled and stored at the job site in such a manner that corners, edges and faces are not damaged. Finished sign blanks shall be stored in either a weather-

proof warehouse or outside and off the ground in a vertical position. All paper, cardboard and chemically treated separators and packaging shall be removed prior to outside storage.

ITEM 644: Small Roadside Sign Supports and Assemblies

All signs shall be installed as shown in the plans and in accordance with the current edition of the "Texas Manual on Uniform Traffic Control Devices" and the “Sign Crew Field Book” (SCFB).

All signs shall be erected according to the locations shown on the signing layout sheets except that a sign may be shifted in order to secure a more desirable location. All sign locations will be staked as shown in the plans and as approved. It is the intent of the plans to erect all roadside traffic signs with the sign edge a minimum of 6 feet from the edge of the shoulder, or if none, 12 feet from the edge of the travel lane. In curb and gutter sections the sign edge shall be a minimum of 2 feet from the face of the curb.

For this project, aluminum type sign blanks as provided for under Item 636 will be required for all proposed signing installed under Item 644. Aluminum sign blanks less than 7.5 square feet shall be 0.08 inch thick, sign blanks 7.5 to 15 square feet shall be 0.100 inch thick and sign blanks greater than 15 square feet shall be 0.125 inch thick.

All excess excavation shall be spread uniformly inside the right of way as directed and shall be included in the price of these Items.

Sign types which design details are not shown on the plans shall conform with the latest edition of the Department's "Standard Highway Sign Design for Texas" Manual.

Signs shown to be removed shall include the complete sign installation and separate the sign post at the concrete foundation. The concrete foundation shall be disposed in accordance with this Bid Item. Except for concrete foundations, all removed sign panels, sign posts, and hardware shall remain the property of the Department. All removed sign installations shall be completely disassembled. All salvageable sections of sign panels shall be recycled by TxDOT. The removed sign material will be required to be hauled to the maintenance yard closest to the project. No signs shall be removed without prior approval.

All existing signs in this project shall be removed and relocated as determined in the field. The complete sign assembly shall be removed and the sign and post shall be separated at the concrete foundation. The concrete foundation shall be disposed of in accordance with this bid Item. No sign shall be removed without prior approval.

All excess excavation shall be spread uniformly inside the Right of Way as directed and shall be included in the price of this item.

County: Hidalgo

Highway: Sugarcane (Mile 9 North)

ITEMS 662 and 666: Work Zone Pavement Markings and Reflectorized Pavement Markings

All permanent pavement markings and work zone pavement markings for this project under these Items shall be 0.100 inches (100 mil) thick thermoplastic.

Any permanent pavement markings or non-removal work zone pavement markings lacking reflectivity in accordance with test method Tex 828-B, will not be paid for, as per district policy. The roadway will be re-striped at no additional compensation.

Pavement surface preparation for markings and markers will not be paid for directly, but shall be considered subsidiary to Item 666.

Prior to any striping operations, an on-site coordination meeting between all the parties involved will be required to review striping details and requirements to ensure quality work.

The beads used on this project shall meet the requirements of Departmental Materials Specification DMS-8290, Glass Traffic Beads Texas Type II & III. Use a 50% Type II/ 50% Type III mix utilizing a double drop system with Type III beads dropped first.

For expressway projects, provide channelizing devices at the ramp connections when temporary pavement marking tabs are placed. These channelizing devices will be subsidiary to item 502.

ITEM 677: Eliminating Existing Pavement Markings and Markers

Asphalt and aggregate types and grades shall be as approved in writing when a surface treatment is used to eliminate existing pavement markings.

SPECIAL SPECIFICATIONS & STANDARD SPECIFICATIONS

ITEM 5

CONTROL OF THE WORK

5.1. Authority of Engineer. The Engineer has the authority to observe, test, inspect, approve, and accept the work. The Engineer decides all questions about the quality and acceptability of materials, work performed, work progress, Contract interpretations, and acceptable Contract fulfillment. The Engineer has the authority to enforce and make effective these decisions.

The Engineer acts as a referee in all questions arising under the terms of the Contract. The Engineer's decisions will be final and binding.

5.2. Plans and Working Drawings. When required, provide working drawings to supplement the plans with all necessary details not included on the Contract plans. Prepare and furnish working drawings in a timely manner and obtain approval, if required, before the beginning of the associated work. For all working drawing submittal requirements, the Engineer may allow electronic and other alternative submission procedures. Have a licensed professional engineer sign, seal, and date the working drawings as indicated in Table 1.

Prepare working drawings using United States standard measures and in the English language. The routing of submittals for review and approval will be established at the preconstruction conference. The Contractor is responsible for the accuracy, coordination, and conformity of the various components and details of the working drawings. Department approval of the Contractor's working drawings will not relieve the Contractor of any responsibility under the Contract. The work performed under this Article will not be measured or paid for directly, but will be subsidiary to pertinent Items.

Table 1
Signature and Approval Requirements for Working Drawings

Working Drawings For		Requires Licensed Professional Engineer's Signature, Seal, and Date	Requires Departmental Approval
1. Alternate or optional designs submitted by Contractor		Yes	Yes
2. Supplementary shop and fabrication drawings for structural Items		No unless required on the plans	See applicable Item
3. Contractor-proposed temporary facilities that affect the public safety, not included on the plans		Yes	Yes
4. Form and falsework details	Bridges, retaining walls, and other major structures	Yes unless otherwise shown on the plans	No[1]
	Minor structures	No unless otherwise shown on the plans	No
5. Erection drawings		Yes	No[1]
6. Contractor-proposed major modifications to traffic control plan		Yes	Yes

1. The Engineer may require that the Contractor have a licensed professional engineer certify that the temporary works are constructed according to the sealed drawings.

5.3. Conformity with Plans, Specifications, and Special Provisions. Furnish materials and perform work in reasonably close conformity with the lines, grades, cross-sections, dimensions, details, gradations, physical and chemical characteristics of materials, and other requirements shown in the Contract (including additional plans for non-site-specific work). Reasonably close conformity limits will be as defined in the respective Items of the Contract or, if not defined, as determined by the Engineer. Obtain approval before deviating from the plans and approved working drawings. Do not perform work beyond the lines and grades shown on the plans or any extra work without the Engineer's authority. Work performed beyond the lines and grades shown on the plans or any extra work performed without authority is considered unauthorized and excluded from pay consideration. The Department will not pay for material rejected due to improper fabrication, excess quantity, or any other reasons within the Contractor's control.

A. Acceptance of Defective or Unauthorized Work. When work fails to meet Contract requirements, but is adequate to serve the design

purpose, the Engineer will decide the extent to which the work will be accepted and remain in place. The Engineer will document the basis of acceptance by a letter and may adjust the Contract price.

B. Correction of Defective or Unauthorized Work. When work fails to meet Contract requirements and is inadequate to serve the design purpose it will be considered defective. Correct, or remove and replace, the work at the Contractor's expense, as directed.

The Department has the authority to correct or to remove and replace defective or unauthorized work. The cost may be deducted from any money due or to become due to the Contractor.

5.4. Coordination of Plans, Specifications, and Special Provisions. The specifications, accompanying plans (including additional plans for non-site-specific work), special provisions, change orders, and supplemental agreements are intended to work together and be interpreted as a whole.

Numerical dimensions govern over scaled dimensions. Special provisions govern over plans (including general notes), which govern over standard specifications and special specifications. Job-specific plan sheets govern over standard plan sheets.

However, in the case of conflict between plans (including general notes) and specifications regarding responsibilities for hazardous materials and traffic control in Items 1 through 9 and Item 502, "Barricades, Signs, and Traffic Handling," special provisions govern over standard specifications and special specifications, which govern over the plans.

Notify the Engineer promptly of any omissions, errors, or discrepancies discovered so that necessary corrections and interpretations can be made. Failure to promptly notify the Engineer will constitute a waiver of all claims for misunderstandings or ambiguities that result from the errors, omissions, or discrepancies discovered.

5.5. Cooperation of Contractor. Cooperate with the Engineer, other Contractors, and utility and railroad companies. All work associated with fulfilling this requirement is subsidiary to the various Items of the Contract and no direct compensation will be made. Provide all information necessary to administer the Contract. Maintain at least one copy of the Contract at the work locations at all times.

Designate in writing a competent, English-speaking Superintendent employed by the Contractor. The Superintendent must be experienced with the work being performed and capable of reading and understanding the Contract. Ensure the Superintendent is available at all times and able to receive instructions from the Engineer or authorized Department representatives and to act for the Contractor. The Engineer may suspend work if a Superintendent is not available or does not meet the above criteria; however, working day charges will not be suspended.

A. Cooperating with the Engineer. Cooperate with the Engineer in every way possible. Respond promptly to instructions from the Engineer.

B. Cooperating with Utilities. Use established safety practices when working near utilities. Consult with the appropriate utilities before beginning work. Notify the Engineer immediately of utility conflicts. The Engineer will decide whether to adjust utilities or adjust the work to eliminate or lessen the conflict. Unless otherwise shown on the plans, the Engineer will make necessary arrangements with the utility owner when utility adjustments are required.

Use work procedures that protect utilities or appurtenances that remain in place during construction. Cooperate with utilities to remove and rearrange utilities to avoid service interruption or duplicate work by the utilities. Allow utilities access to the right of way.

Immediately notify the appropriate utility of service interruptions resulting from damage due to construction activities. Cooperate with utilities until service is restored. Maintain access to fire hydrants when necessary.

C. **Cooperation Between Contractors.** Cooperate and coordinate with other Contractors working within the limits or adjacent to the limits.

D. **Cooperation with Railroads.** Plan and prosecute portions of the work involving a railway to avoid interference with or hindrance to the railroad company.

5.6. Construction Surveying. Use Method A unless otherwise specified in the Contract. Upon request, the Engineer will allow the Contractor to copy available earthwork cross-sections, computer printouts or data files, and other information necessary to establish and control work. Maintain the integrity of control points. Preserve all control points, stakes, marks, and right of way markers. Assume cost and responsibility of replacing disturbed control points, stakes, marks, and right of way markers. If the Department repairs disturbed control points, stakes, marks, or right of way markers, the cost of repair may be deducted from money due or to become due to the Contractor. Replace right of way markers under the direction of a RPLS. This work will be subsidiary to pertinent Items.

The Engineer reserves the right to make measurements and surveys to determine the accuracy of the work and determine pay quantities. The Engineer's measurements and surveys do not relieve the Contractor's responsibility for accuracy of work. Allow the Engineer adequate time to verify the surveying.

A. **Method A.** The Engineer will set control points for establishing lines, slopes, grades, and centerlines and for providing both vertical and horizontal control at maximum intervals of 1,500 ft. Use these control points as reference to perform the work.

   Furnish materials, equipment, and qualified workforce necessary for the construction survey work. Place construction points, stakes, and marks at intervals sufficient to control work to established tolerances. Place construction stakes at intervals of no more than 100 ft., or as directed. Place stakes and marks so as not to interfere with normal maintenance operations.

B. **Method B.** The Engineer will set adequate control points, stakes, and marks to establish lines, slopes, grades, and centerlines. Furnish additional work, stakes, materials, and templates necessary for marking and maintaining points and lines.

C. **Method C.** Set adequate control points, stakes, and marks to establish lines, slopes, grades, and centerlines.

5.7. Inspection. Inspectors are authorized representatives of the Engineer. Inspectors are authorized to examine all work performed and materials furnished, including preparation, fabrication, and material manufacture. Inspectors inform the Contractor of failures to meet Contract requirements. Inspectors may reject work or materials and may suspend work until any issues can be referred to and decided by the Engineer. Inspectors cannot alter, add, or waive Contract provisions, issue instructions contrary to the Contract, act as foremen for the Contractor, or interfere with the management of the work. Inspection or lack of inspection will not relieve the Contractor from obligation to provide materials or perform the work in accordance with the Contract.

Provide safe access to all parts of the work and provide information and assistance to the Engineer to allow a complete and detailed inspection. Give the Engineer sufficient notice to inspect the work. Work performed without suitable inspection, as determined by the

Engineer, may be ordered removed and replaced at Contractor's expense. Remove or uncover portions of finished work as directed. Once inspected, restore work to Contract requirements. If the uncovered work is acceptable, the costs to uncover, remove, and replace or make good the parts removed will be paid for in accordance with Article 4.2, "Changes in the Work." If the work is unacceptable, assume all costs associated with repair or replacement, including the costs to uncover, remove, and replace or make good the parts removed.

When a government entity, utility, railroad company, or other entity accepts or pays a portion of the Contract, that organization's representatives may inspect the work but cannot direct the Contractor. The right of inspection does not make that entity a party to the Contract and does not interfere with the rights of the parties to the Contract.

5.8. Final Acceptance.

A. Routine Maintenance Contracts. The Engineer will perform final acceptance and notify the Contractor of acceptance. The Engineer may use final acceptance procedures shown for construction Contracts.

B. Construction Contracts. Final acceptance is made when all work is complete and the Engineer, in writing, accepts all work for the work locations in the Contract. Final acceptance relieves the Contractor from further Contract responsibilities.

1. **Work Completed.** Work completed must include work for vegetative establishment and maintenance, test, and performance periods and work to meet the requirements of Article 4.6, "Final Cleanup."
2. **Final Inspection.** After all work is complete, the Engineer in charge of the work will request a final inspection by the Engineer authorized to accept the work.

   The final inspection will be made as soon as possible, and not later than 10 calendar days after the request. No working day charges will be made between the date of request and final inspection.

   After the final inspection, if the work is satisfactory, the Engineer will notify the Contractor in writing of the final acceptance of the work. If the final inspection finds any work to be unsatisfactory, the Engineer will identify in writing all deficiencies in the work requiring correction. Correct the deficiencies identified. Working day charges will resume if these deficiencies are not corrected within 7 calendar days, unless otherwise authorized by the Engineer. Upon correction, the Engineer will make an inspection to verify that all deficiencies were corrected satisfactorily. The Engineer will provide written notice of the final acceptance.
3. **Final Measurement.** Final measurements and pay quantity adjustments may be made after final acceptance.
4. **Removal of Traffic Control Devices.** Remove construction traffic control devices and advance warning signs upon final acceptance.

C. Multiple Work Order Contracts. For contracts with multiple work orders (recurring maintenance work or non-site-specific Contracts), final acceptance may be made upon completion of the work for each work order, in accordance with Sections 5.8.A, "Routine Maintenance Contracts," and 5.8.B, "Construction Contracts."

ITEM 8

PROSECUTION AND PROGRESS

8.1. Prosecution of Work. Before starting work, schedule and attend a preconstruction conference with the Engineer. Failure to schedule and attend a preconstruction conference is not grounds for delaying the beginning of working day charges. Unless otherwise shown in the Contract, begin work within 30 calendar days (7 calendar days for routine maintenance Contracts) after the authorization date to begin work as shown on the work order. Prosecute the work continuously to completion within the working days specified. Unless otherwise shown on the plans, work may be prosecuted in concurrent phases if no changes are required in the traffic control plan or if a revised traffic control plan is approved. Notify the Engineer at least 24 hr. before beginning work or before beginning any new operation. Do not start new operations to the detriment of work already begun. Minimize interference to traffic.

When callout work is required, begin work in the right of way within the specified time and continuously prosecute the work until completion.

8.2. Progress Schedules. Schedules are subject to review and acceptance.

A. Routine Maintenance Contracts. Before starting work on a routine maintenance Contract, submit an outline of the proposed procedure for performing the work. Include a sequence of work and an estimated progress schedule if required. Submit revised progress schedules as requested. When shown on the plans, provide progress schedules meeting the requirements of Section 8.2.B, “Construction Contracts.”

B. Construction Contracts. Before starting work on a construction Contract, prepare and submit a progress schedule based on the sequence of work and traffic control plan shown in the Contract. At a minimum, prepare the progress schedule as a bar chart. Include all planned work activities and sequences and show Contract completion within the number of working days specified. Incorporate major material procurements, known utility relocations, and other activities that may affect the completion of the Contract in the progress schedule. Show a beginning date, ending date, and duration in number of working days for each activity. Do not use activities exceeding 20 working days, except for agreed upon activities. Show an estimated production rate per working day for each work activity.

Submit an updated progress schedule monthly, unless otherwise shown in the Contract or as directed. Update the progress schedule by adding actual progress made during the previous update period, including approved changes to the sequence of work and the traffic control plan. If an updated progress schedule indicates the Contract will not be completed within the number of working days specified, notify the Engineer in writing whether the Contractor will revise the progress schedule to meet the number of working days specified or exceed the number of working days specified.

Notify the Engineer in writing of proposed major changes in the progress schedule. Major changes are those that may affect compliance with the Contract requirements

or that change the critical path or controlling Item of work. The Engineer reserves the right to reject these proposed changes.

No direct compensation will be made for fulfilling these requirements, as this work is considered subsidiary to the Items of the Contract.

C. Contracts with Multiple Work Orders. For multiple work order Contracts, provide a schedule in accordance with Sections 8.2.A, "Routine Maintenance Contracts," and 8.2.B, Construction Contracts," for each work order.

8.3. Computation of Contract Time for Completion. Working day charges will begin 15 calendar days (7 calendar days for routine maintenance Contracts) after the date of the written authorization to begin work. Working day charges will continue in accordance with the Contract. The Engineer may consider increasing the number of working days under extraordinary circumstances.

A. Working Day Charges. Working days will be charged in accordance with Section 8.3.A.4, "Standard Workweek," unless otherwise shown on the plans. For multiple work order Contracts, working days will be established in each work order on a separate basis. Working days will be computed and charged in accordance with one of the following, as shown in the Contract:

1. **Five-Day Workweek.** Working days will be charged Monday through Friday, excluding national holidays, regardless of weather conditions or material availability. The Contractor has the option of working on Saturdays. Provide sufficient advance notice to the Engineer when scheduling work on Saturdays. Work on Sundays and national holidays will not be permitted without written permission of the Engineer. If work requiring an Inspector to be present is performed on a Saturday, Sunday, or national holiday, and weather and other conditions permit the performance of work for 7 hr. between 7:00 A.M. and 6:00 P.M., a working day will be charged.
2. **Six-Day Workweek.** Working days will be charged Monday through Saturday, excluding national holidays, regardless of weather conditions or material availability. Work on Sundays and national holidays will not be permitted without written permission of the Engineer. If work requiring an Inspector to be present is performed on a Sunday or a national holiday, and weather or other conditions permit the performance of work for 7 hr. between 7:00 A.M. and 6:00 P.M., a working day will be charged.
3. **Seven-Day Workweek.** Working days will be charged Monday through Sunday, excluding national holidays, regardless of weather conditions or material availability. Work on national holidays will not be permitted without written permission of the Engineer. If work is performed on any of these holidays requiring an Inspector to be present, and weather or other conditions permit the performance of work for 7 hr. between 7:00 A.M. and 6:00 P.M., a working day will be charged.
4. **Standard Workweek.** Working days will be charged Monday through Friday, excluding national or state holidays, if weather or other conditions permit the performance of the principal unit of work underway, as determined by the Engineer, for a continuous period of at least 7 hr. between 7:00 A.M. and

6:00 P.M., unless otherwise shown in the Contract. The Contractor has the option of working on Saturdays or state holidays. Provide sufficient advance notice to the Engineer when scheduling work on Saturdays. Work on Sundays and national holidays will not be permitted without written permission of the Engineer. If work requiring an Inspector to be present is performed on a Saturday, Sunday, or holiday, and weather or other conditions permit the performance of work for 7 hr. between 7:00 A.M. and 6:00 P.M., a working day will be charged.

5. **Calendar Day.** Working days will be charged Sunday through Saturday, including all holidays, regardless of weather conditions, material availability, or other conditions not under the control of the Contractor.
6. **Other.** Working days will be charged as shown on the plans.

B. Restricted Work Hours. Restrictions on Contractor work hours and the related definition for working day charges are as prescribed in this Article unless otherwise shown on the plans.

C. Nighttime Work. Nighttime work is allowed only when shown on the plans or directed or allowed by the Engineer. Nighttime work is defined as work performed from 30 min. after sunset to 30 min. before sunrise.

1. **Five-, Six-, and Seven-Day Workweeks.** Nighttime work that extends past midnight will be assigned to the following day for the purposes of approval for allowing work on Sundays or national holidays.
2. **Standard Workweek.**
   a. **Nighttime Work Only.** When nighttime work is allowed or required and daytime work is not allowed, working day charges will be made when weather and other conditions permit the performance of the principal unit of work underway, as determined by the Engineer, for a continuous period of at least 7 hr. for the nighttime period, as defined in Section 8.3.C, unless otherwise shown in the Contract.
   b. **Nighttime Work and Daytime Work Requiring Inspector.** When nighttime work is performed or required and daytime work is allowed, working day charges will be made when weather and other conditions permit the performance of the principal unit of work underway, as determined by the Engineer, for a continuous period of at least 7 hr. for the nighttime period, as defined in Section 8.3.C, or for a continuous period of at least 7 hr. for the alternative daytime period unless otherwise shown in the Contract. Only 1 day will be charged for each 24-hr. time period. When the Engineer agrees to restrict work hours to the nighttime period only, working day charges will be in accordance with Section 8.3.C.2.a.

D. Time Statements. The Engineer will furnish the Contractor a monthly time statement. Review the monthly time statement for correctness. Report protests in writing, no later than 30 calendar days after receipt of the time statement, providing a detailed explanation for each day protested. Not filing a protest within 30 calendar days will indicate acceptance of the working day charges and future consideration of that statement will not be permitted.

8.4. Temporary Suspension of Work or Working Day Charges. The Engineer may suspend the work, wholly or in part, and will provide notice and reasons for the suspension in writing. Suspend and resume work only as directed in writing.

When part of the work is suspended, the Engineer may suspend working day charges only when conditions not under the control of the Contractor prohibit the performance of critical activities. When all of the work is suspended for reasons not under the control of the Contractor, the Engineer will suspend working day charges.

8.5. Failure to Complete Work on Time. The time established for the completion of the work is an essential element of the Contract. If the Contractor fails to complete the work within the number of working days specified, working days will continue to be charged. Failure to complete the Contract, or a separate work order when specified in the Contract, within the number of working days specified, including any approved additional working days, will result in liquidated damages for each working day charged over the number of working days specified in the Contract. The dollar amount specified in the Contract will be deducted from any money due or to become due the Contractor for each working day the Contract or work order remains incomplete. This amount will be assessed not as a penalty, but as liquidated damages. The amount assessed for non-site-specific Contracts will be based on the estimated amount for each work order unless otherwise shown in the Contract.

8.6. Abandonment of Work or Default of Contract. The Engineer may declare the Contractor to be in default of the Contract if the Contractor:

- fails to begin the work within the number of days specified,
- fails to prosecute the work to assure completion within the number of days specified,
- fails to perform the work in accordance with the Contract requirements,
- neglects or refuses to remove and replace rejected materials or unacceptable work,
- discontinues the prosecution of the work without the Engineer's approval,
- makes an unauthorized assignment,
- fails to resume work that has been discontinued within a reasonable number of days after notice to do so,
- is uncooperative, disruptive or threatening, or
- fails to conduct the work in an acceptable manner.

If any of these conditions occur, the Engineer will give notice in writing to the Contractor and the Surety of the intent to declare the Contractor in default. If the Contractor does not proceed as directed within 10 days after the notice, the Department may upon written notice declare the Contractor to be in default of the Contract. The Department will also provide written notice of default to the Surety. Working day charges will continue until completion of the Contract. The Contractor may also be subject to sanctions under the TAC.

The Department will determine the method used for the completion of the remaining work as follows:

- **Contracts without Performance Bonds.** The Department will determine the most expeditious and efficient way to complete the work, and recover damages from the Contractor.

- **Contracts with Performance Bonds.** The Department will, without violating the Contract, demand that the Contractor's Surety complete the remaining work in accordance with the terms of the original Contract. A completing Contractor will be considered a subcontractor of the Surety. The Department reserves the right to approve or reject proposed subcontractors. Work may resume after the Department receives and approves certificates of insurance as required in Article 7.4, "Insurance and Bonds." Certificates of insurance may be issued in the name of the completing Contractor. The Surety is responsible for making every effort to expedite the resumption of work and completion of the Contract. The Department may complete the work using any or all materials at the work locations that it deems suitable and acceptable. Any costs incurred by the Department for the completion of the work under the Contract will be the responsibility of the Surety.

From the time of notification of the default until work resumes (either by the Surety or the Department), the Department will maintain traffic control devices and will do any other work it deems necessary, unless otherwise agreed upon by the Department and the Surety. All costs associated with this work will be deducted from money due to the Surety.

The Department will hold all money earned but not disbursed by the date of default. Upon resumption of the work after the default, all payments will be made to the Surety. All costs and charges incurred by the Department as a result of the default, including the cost of completing the work under the Contract, costs of maintaining traffic control devices, costs for other work deemed necessary, and any applicable liquidated damages or disincentives will be deducted from money due the Contractor for completed work. If these costs exceed the sum that would have been payable under the Contract, the Surety will be liable and pay the Department the balance of these costs in excess of the Contract price.

In case the costs incurred by the Department are less than the amount that would have been payable under the Contract if the work had been completed by the Contractor, the Department will be entitled to retain the difference.

If a Contractor defaults, the requirement that 30% of the work be done by the Contractor is suspended. However, Department approval of all subcontractors continues to be required. DBEs must continue to be used in accordance with the commitments previously approved by the Department.

If it is determined, after the Contractor is declared in default, that the Contractor was not in default, the rights and obligations of the parties will be the same as if the termination had been issued for the convenience of the public as provided in Article 8.7, "Termination of Contract."

8.7. Termination of Contract. The Department may terminate the Contract in whole or in part whenever:

- the Contractor is prevented from proceeding with the work as a direct result of an executive order of the President of the United States or the Governor of the State;
- the Contractor is prevented from proceeding with the work due to a national emergency, or when the work to be performed under the Contract is stopped, directly

or indirectly, because of the freezing or diversion of materials, equipment or labor as the result of an order or a proclamation of the President of the United States;

- the Contractor is prevented from proceeding with the work due to an order of any federal authority;
- the Contractor is prevented from proceeding with the work by reason of a preliminary, special, or permanent restraining court order where the issuance of the restraining order is primarily caused by acts or omissions of persons or agencies other than the Contractor; or
- the Department determines that termination of the Contract is in the best interest of the State or the public. This includes but is not limited to the discovery of significant hazardous material problems, right of way acquisition problems, or utility conflicts that would cause substantial delays or expense to the Contract.

A. Procedures and Submittals. The Engineer will provide written notice to the Contractor of termination specifying the extent of the termination and the effective date. Upon notice, immediately proceed in accordance with the following:

- stop work as specified in the notice;
- place no further subcontracts or orders for materials, services, or facilities, except as necessary to complete a critical portion of the Contract, as approved by the Engineer;
- terminate all subcontracts to the extent they relate to the work terminated;
- complete performance of the work not terminated;
- settle all outstanding liabilities and termination settlement proposals resulting from the termination for public convenience of the Contract;
- create an inventory report, including all acceptable materials and products obtained for the Contract that have not been incorporated in the work that was terminated (include in the inventory report a description, quantity, location, source, cost, and payment status for each of the acceptable materials and products); and
- take any action necessary, or that the Engineer may direct, for the protection and preservation of the materials and products related to the Contract that are in the possession of the Contractor and in which the Department has or may acquire an interest.

B. Settlement Provisions. Within 60 calendar days of the date of the notice of termination, submit a final termination settlement proposal, unless otherwise approved. The Engineer will prepare a change order that reduces the affected quantities of work and adds acceptable costs for termination. No claim for loss of anticipated profits will be considered. The Department will pay reasonable and verifiable termination costs including:

- all work completed at the unit bid price and partial payment for incomplete work;
- the percentage of Item 500, “Mobilization,” equivalent to the percentage of work complete or actual cost that can be supported by cost records, whichever is greater;
- expenses necessary for the preparation of termination settlement proposals and support data;
- the termination and settlement of subcontracts;

- storage, transportation, restocking, and other costs incurred necessary for the preservation, protection, or disposition of the termination inventory; and
- other expenses acceptable to the Department.

8.8. Subcontracting. Do not sublet any portion of a construction Contract without the Engineer's written approval. A subcontract does not relieve any responsibility under the Contract and bonds. Ensure that all subcontracted work complies with all governing labor provisions.

A. Construction Contracts and Federally Funded Routine Maintenance Contracts. Perform work with own organization on at least 30% of the total original Contract cost (25% if the Contractor is a Small Business Enterprise on a wholly State or local funded Contract), excluding any specialty items as determined by the Engineer. Specialty items are those that require highly specialized knowledge, abilities, or equipment not usually available in the contracting firm expected to bid on the proposed Contract as a whole.

Specialty items will be shown on the plans or as determined by the Engineer. Bid cost of specialty items performed by subcontractors will be deducted from the total original Contract cost before computing the required amount of work to be performed by the Contractor's own organization.

The term "perform work with own organization" includes only:

- workers employed and paid directly by the Contractor or wholly owned subsidiary;
- equipment owned by the Contractor or wholly owned subsidiary;
- rented or leased equipment operated by the Contractor's employees or wholly owned subsidiary's employees;
- materials incorporated into the work if the majority of the value of the work involved in incorporating the material is performed by the Contractor's own organization, including a wholly owned subsidiary's organization; and
- labor provided by staff leasing firms licensed under Chapter 91 of the Texas Labor Code for nonsupervisory personnel if the Contractor or wholly owned subsidiary maintains direct control over the activities of the leased employees and includes them in the weekly payrolls.

When staff leasing firms provide materials or equipment, they are considered subcontractors. In these instances, submit staff leasing firms for approval as a subcontractor.

Copies of cancelled checks and certified statements may be required to verify compliance with the requirements of this Section.

B. Routine Maintenance Contracts. The requirements for performing work with the Contractor's own organization do not apply to wholly State funded routine maintenance Contracts.

8.9. Workers and Equipment. Furnish suitable machinery, equipment, and construction forces for the proper prosecution of the work. Provide adequate lighting to address quality requirements and inspection of nighttime work.

At the written request of the Engineer, immediately remove from the work locations any employee or representative of the Contractor or a subcontractor who, in the opinion of the Engineer, does not perform work in a proper and skillful manner or who is disrespectful, intemperate, disorderly, uncooperative, or otherwise objectionable. Do not reinstate these individuals without the written consent of the Engineer.

The Engineer may suspend the work without suspending working day charges until the Contractor complies with these requests.

8.10. Minimum Wage Requirements for Routine Maintenance Contracts. The Contractor affirms by signing a wholly State or local funded routine maintenance Contract that employees, contract labor, and any subcontractor's employees are paid at least federal minimum wages as set forth in 29 CFR 206, unless otherwise shown on the plans.

Keep a copy of each payroll showing the name, number of hours worked each day, and the wage rate paid each employee, contract labor, and any subcontractor's employees together with a complete record of all deductions made from the wages. Upon request, submit copies of the payroll records. Progress payments may be withheld if any of these requirements are not satisfied.

ITEM 100

PREPARING RIGHT OF WAY

100.1. Description. Prepare the right of way and designated easements for construction operations by removing and disposing of all obstructions when removal of such obstructions is not specifically shown on the plans to be paid by other Items.

100.2. Construction. Protect designated features on the right of way and prune trees and shrubs as directed. Do not park equipment, service equipment, store materials, or disturb the root area under the branches of trees designated for preservation. When shown on the plans, treat cuts on trees with an approved tree wound dressing within 20 min. of making a pruning cut or otherwise causing damage to the tree. Follow all local and state regulations when burning. If burning of brush is approved, pile and burn at approved locations. When working in state or national forests or parks, coordinate work with state and federal authorities. Testing, removal, and disposal of hazardous materials will be in accordance with Article 6.10, "Hazardous Materials."

Clear areas shown on the plans of all obstructions, except those landscape features that are to be preserved. Such obstructions include but are not limited to remains of houses and other structures, foundations, floor slabs, concrete, brick, lumber, plaster, septic tank drain fields, basements, abandoned utility pipes or conduits, equipment, fences, retaining walls, and other items as specified on the plans. Remove vegetation and other landscape features not designated for preservation, curb and gutter, driveways, paved parking areas, miscellaneous stone, sidewalks, drainage structures, manholes, inlets, abandoned railroad tracks, scrap iron, and debris, whether above or below ground. Removal of live utility facilities is not included in this Item. Remove culverts, storm sewers, manholes, and inlets in proper sequence to maintain traffic and drainage.

In areas receiving embankment, remove obstructions not designated for preservation to 2 ft. below natural ground. In areas to be excavated, remove obstructions to 2 ft. below the excavation level. In all other areas, remove obstructions to 1 ft. below natural ground. When allowed by the plans or directed, cut trees and stumps off to ground level. Plug the remaining ends of abandoned underground structures over 3 in. in diameter with concrete to form a tight closure. Backfill, compact, and restore areas where obstructions have been removed, unless otherwise directed. Use approved material for backfilling. Dispose of wells in accordance with Item 103, "Disposal of Wells."

Accept ownership, unless otherwise directed, and dispose of removed materials and debris at locations off the right of way in accordance with local, state, and federal requirements.

100.3. Measurement. This Item will be measured by the acre; by the 100-foot station, regardless of the width of the right of way; or by each tree removed.

100.4. Payment. For "acre" and "station" measurement, the work performed in accordance with this Item and measured as provided under "Measurement" will be paid for at the unit price bid for "Preparing Right of Way." For "each" measurement, the work performed in accordance with this Item and measured as provided under "Measurement"

will be paid for at the unit price bid for “Preparing Right of Way (Tree)” of the diameter specified. This price is full compensation for pruning of designated trees and shrubs; removal and disposal of structures and obstructions; backfilling of holes; furnishing and placing concrete for plugs; and equipment, labor, tools, and incidentals.

Total payment of this Item will not exceed 10% of the original contract amount until final acceptance or the initial release of retainage. The remainder will be paid on the estimate after the partial release of retainage.

ITEM 110
EXCAVATION

110.1. Description. Excavate areas as shown on the plans or as directed. Remove materials encountered to the lines, grades, and typical sections shown on the plans and cross-sections.

110.2. Construction. Accept ownership of unsuitable or excess material and dispose of material in accordance with local, state, and federal regulations at locations outside the right of way.

Maintain drainage in the excavated area to avoid damage to the roadway section. Correct any damage to the subgrade caused by weather, at no additional cost to the Department.

Shape slopes to avoid loosening material below or outside the proposed grades. Remove and dispose of slides as directed.

A. Rock Cuts. Excavate to finish subgrade. Manipulate and compact subgrade in accordance with Article 132.3.D, "Compaction Methods," unless excavation is to clean homogenous rock at finish subgrade elevation. If excavation extends below finish subgrade, use approved embankment material compacted in accordance with Article 132.3.D to replace undercut material at no additional cost.

B. Earth Cuts. Excavate to finish subgrade. In areas where base or pavement structure will be placed on subgrade, scarify subgrade to a uniform depth at least 6 in. below finish subgrade elevation. Manipulate and compact subgrade in accordance with Article 132.3.D, "Compaction Methods."

If unsuitable material is encountered below subgrade elevations, take corrective measures as directed. Drying required deeper than 6 in. below subgrade elevation will be paid for in accordance with Article 9.4, "Payment for Extra Work." Excavation and replacement of unsuitable material below subgrade elevations will be performed and paid for in accordance with the applicable bid items. However, if Item 132, "Embankment," is not included in the Contract, payment for replacement of unsuitable material will be paid for in accordance with Article 9.4.

C. Subgrade Tolerances. For turnkey construction, excavate to within 1/2 in. in cross-section and 1/2 in. in 16 ft. measured longitudinally. For staged construction, excavate to within 0.1 ft. in cross-section and 0.1 ft. in 16 ft. measured longitudinally.

110.3. Measurement. This Item will be measured by the cubic yard in its original position as computed by the method of average end areas.

This is a plans quantity measurement Item. The quantity to be paid is the quantity shown in the proposal unless modified by Article 9.2, "Plans Quantity Measurement." Additional measurements or calculations will be made if adjustments of quantities are required.

Limits of measurement for excavation in retaining wall areas will be as shown on the plans.

Shrinkage or swelling factors will not be considered in determining the calculated quantities.

110.4. Payment. The work performed and materials furnished in accordance with this Item and measured as provided under “Measurement” will be paid for at the unit price bid for “Excavation (Roadway),” “Excavation (Channel),” “Excavation (Special),” or “Excavation (Roadway and Channel).” This price is full compensation for authorized excavation; drying; undercutting subgrade and reworking or replacing the undercut material in rock cuts; hauling; disposal of material not used elsewhere on the project; scarification and compaction; and equipment, labor, materials, tools, and incidentals.

When a slide not due to the Contractor’s negligence or operation occurs, payments for removal and disposal of the slide material will be in accordance with Article 9.4, “Payment for Extra Work.” Excavation in backfill areas of retaining walls will not be measured or paid for directly but will be subsidiary to pertinent Items.

ITEM 132

EMBANKMENT

132.1. Description. Furnish, place, and compact materials for construction of roadways, embankments, levees, dikes, or any designated section of the roadway where additional material is required.

132.2. Materials. Furnish approved material capable of forming a stable embankment from required excavation in the areas shown on the plans or from sources outside the right of way. Provide 1 or more of the following types as shown on the plans:

- **Type A.** Granular material that is free from vegetation or other objectionable material and meets the requirements of Table 1.

Table 1
Testing Requirements

Property	Test Method	Specification Limit
Liquid limit	Tex-104-E	≤ 45
Plasticity index (PI)	Tex-106-E	≤ 15
Bar linear shrinkage	Tex-107-E	≥ 2

The Linear Shrinkage test only needs to be performed as indicated in Tex-104-E.

- **Type B.** Materials such as rock, loam, clay, or other approved materials.
- **Type C.** Material meeting the specification requirements shown on the plans.
- **Type D.** Material from required excavation areas shown on the plans.

Retaining wall backfill material must meet the requirements of the pertinent retaining wall Items.

132.3. Construction. Meet the requirements of Item 7, "Legal Relations and Responsibilities to the Public," when off right of way sources are used. To allow for required testing, notify the Engineer before opening a material source. Complete preparation of the right of way, in accordance with Item 100, "Preparing Right of Way," for areas to receive embankment.

Backfill tree-stump holes or other minor excavations with approved material and tamp. Restore the ground surface, including any material disked loose or washed out, to its original slope. Compact the ground surface by sprinkling in accordance with Item 204, "Sprinkling," and by rolling using equipment complying with Item 210, "Rolling," when directed.

Scarify and loosen the unpaved surface areas, except rock, to a depth of at least 6 in., unless otherwise shown on the plans. Bench slopes before placing material. Begin placement of material at the toe of slopes. Do not place trees, stumps, roots, vegetation, or other objectionable material in the embankment. Simultaneously recompact scarified material with the placed embankment material. Do not exceed the layer depth specified in Section 132.3.D, "Compaction Methods."

Construct embankments to the grade and sections shown on the plans. Construct the embankment in layers approximately parallel to the finished grade for the full width of the individual roadway cross sections, unless otherwise shown on the plans. Ensure that each section of the embankment conforms to the detailed sections or slopes. Maintain the finished section, density, and grade until the project is accepted.

A. Earth Embankments. Earth embankment is mainly composed of material other than rock. Construct embankments in successive layers, evenly distributing materials in lengths suited for sprinkling and rolling.

Obtain approval to incorporate rock and broken concrete produced by the construction project in the lower layers of the embankment. When the size of approved rock or broken concrete exceeds the layer thickness requirements in Section 132.3.D, "Compaction Methods," place the rock and concrete outside the limits of the completed roadbed. Cut and remove all exposed reinforcing steel from the broken concrete.

Move the material dumped in piles or windrows by blading or by similar methods and incorporate it into uniform layers. Featheredge or mix abutting layers of dissimilar material for at least 100 ft. to ensure there are no abrupt changes in the material. Break down clods or lumps of material and mix embankment until a uniform material is attained.

Apply water free of industrial wastes and other objectionable matter to achieve the uniform moisture content specified for compaction.

When ordinary compaction is specified, roll and sprinkle each embankment layer in accordance with Section 132.3.D.1, "Ordinary Compaction." When density control is specified, compact the layer to the required density in accordance with Section 132.3.D.2, "Density Control."

B. Rock Embankments. Rock embankment is mainly composed of rock. Construct rock embankments in successive layers for the full width of the roadway cross-section with a depth of 18 in. or less. Increase the layer depth for large rock sizes as approved. Do not exceed a depth of 2-1/2 ft. in any case. Fill voids created by the large stone matrix with smaller stones during the placement and filling operations.

Ensure the depth of the embankment layer is greater than the maximum dimension of any rock. Do not place rock greater than 2 ft. in its maximum dimension, unless otherwise approved. Construct the final layer with graded material so that the density and uniformity is in accordance with Section 132.3.D, "Compaction Methods." Break up exposed oversized material as approved.

When ordinary compaction is specified, roll and sprinkle each embankment layer in accordance with Section 132.3.D.1, "Ordinary Compaction." When density control is specified, compact each layer to the required density in accordance with Section 132.3.D.2, "Density Control." When directed, proof-roll each rock layer where density testing is not possible, in accordance with Item 216, "Proof Rolling," to ensure proper compaction.

C. Embankments Adjacent to Culverts and Bridges. Compact embankments adjacent to culverts and bridges in accordance with Item 400, "Excavation and Backfill for Structures."

D. Compaction Methods. Begin rolling longitudinally at the sides and proceed toward the center, overlapping on successive trips by at least 1/2 the width of the roller. On super elevated curves, begin rolling at the lower side and progress toward the high side. Alternate roller trips to attain slightly different lengths. Compact embankments in accordance with one of the following methods as shown on the plans:

1. **Ordinary Compaction.** Use approved rolling equipment complying with Item 210, "Rolling," to compact each layer. The plans or the Engineer may require specific equipment. Do not allow the loose depth of any layer to exceed 8 in., unless otherwise approved. Before and during rolling operations, bring each layer to the moisture content directed. Compact each layer until there is no evidence of further consolidation. Maintain a level layer to ensure uniform compaction. If the required stability or finish is lost for any reason, recompact and refinish the subgrade at no additional expense to the Department.

2. **Density Control.** Compact each layer to the required density using equipment complying with Item 210, "Rolling." Determine the maximum lift thickness based on the ability of the compacting operation and equipment to meet the required density. Do not exceed layer thickness of 16 in. loose or 12 in. compacted material, unless otherwise approved. Maintain a level layer to ensure uniform compaction.

   The Engineer will use Tex-114-E to determine the maximum dry density (D_a) and optimum moisture content (W_{opt}). Meet the requirements for field density and moisture content in Table 2, unless otherwise shown on the plans.

Table 2
Field Density Control Requirements

Description	Density[1]	Moisture Content[1]
	Tex-115-E	
PI ≤ 15	≥ 98% D_a	
15 < PI ≤ 35	≥ 98% D_a and ≤ 102% D_a	≥ $W_{opt.}$
PI > 35	≥ 95% D_a and ≤ 100% D_a	≥ $W_{opt.}$

Each layer is subject to testing by the Engineer for density and moisture content. During compaction, the moisture content of the soil should not exceed the value shown on the moisture-density curve, above optimum, required to achieve

- 98% dry density for soils with a PI greater than 15 but less than or equal to 35 or
- 95% dry density for soils with PI greater than 35.

When required, remove small areas of the layer to allow for density tests. Replace the removed material and recompact at no additional expense to the Department. Proof-roll in accordance with Item 216, "Proof Rolling," when shown on the plans or as directed. Correct soft spots as directed.

E. Maintenance of Moisture and Reworking. Maintain the density and moisture content once all requirements in Table 2 are met. For soils with a PI greater than 15, maintain the moisture content no lower than 4 percentage points below optimum. Rework the material to obtain the specified compaction when the material loses the required stability, density, moisture, or finish. Alter the compaction methods and procedures on subsequent work to obtain specified density as directed.

F. Acceptance Criteria.

1. **Grade Tolerances.**
   a. **Staged Construction.** Grade to within 0.1 ft. in the cross-section and 0.1 ft. in 16 ft. measured longitudinally.
   b. **Turnkey Construction.** Grade to within 1/2 in. in the cross-section and 1/2 in. in 16 ft. measured longitudinally.
2. **Gradation Tolerances.** When gradation requirements are shown on the plans, material is acceptable when not more than 1 of the 5 most recent gradation tests is outside the specified limits on any individual sieve by more than 5 percentage points.
3. **Density Tolerances.** Compaction work is acceptable when not more than 1 of the 5 most recent density tests is outside the specified density limits, and no test is outside the limits by more than 3 lb. per cubic foot.
4. **Plasticity Tolerances.** Material is acceptable when not more than 1 of the 5 most recent PI tests is outside the specified limit by no more than 2 points.

132.4. Measurement. Embankment will be measured by the cubic yard. Measurement will be further defined for payment as follows:

A. Final. The cubic yard will be measured in its final position using the average end area method. The volume is computed between the original ground surface or the surface upon which the embankment is to be constructed and the lines, grades, and slopes of the embankment. In areas of salvaged topsoil, payment for embankment will be made in accordance with Item 160, "Topsoil." Shrinkage or swell factors will not be considered in determining the calculated quantities.

B. Original. The cubic yard will be measured in its original and natural position using the average end area method.

C. Vehicle. The cubic yard will be measured in vehicles at the point of delivery.

When measured by the cubic yard in its final position, this is a plans quantity measurement Item. The quantity to be paid is the quantity shown in the proposal, unless modified by Article 9.2, "Plans Quantity

Measurement." Additional measurements or calculations will be made if adjustments of quantities are required.

Shrinkage or swell factors are the Contractor's responsibility. When shown on the plans, factors are for informational purposes only.

Measurement of retaining wall backfill in embankment areas is paid for as embankment, unless otherwise shown on plans. Limits of measurement for embankment in retaining wall areas are shown on the plans.

132.5. Payment. The work performed and materials furnished in accordance with this Item and measured as provided under "Measurement" will be paid for at the unit price bid for "Embankment (Final)," "Embankment (Original)," or "Embankment (Vehicle)," of the compaction method and type specified. This price is full compensation for furnishing embankment; hauling; placing, compacting, finishing, and reworking; disposal of waste material; and equipment, labor, tools, and incidentals.

When proof rolling is directed, it will be paid for in accordance with Item 216, "Proof Rolling."

All sprinkling and rolling, except proof rolling, will not be paid for directly, but will be considered subsidiary to this Item, unless otherwise shown on the plans.

Where subgrade is constructed under this contract, correction of soft spots in the subgrade will be at the Contractor's expense. Where subgrade is not constructed under this contract, correction of soft spots in the subgrade will be paid in accordance with Article 9.4, "Payment for Extra Work."

ITEM 134

BACKFILLING PAVEMENT EDGES

134.1. Description. Backfill pavement edges in conformance with the typical sections shown on the plans.

134.2. Materials.

A. Backfill Material. Use backfill material capable of sustaining vegetation unless otherwise specified on the plans. Furnish backfill material of one of the following types:

1. **Type A.** Backfill secured from a source outside the right of way and according to the requirements as shown on the plans.
2. **Type B.** Backfill secured from within the existing right of way as shown on the plans or as directed.
3. **Type C.** Mulch sodding backfill secured from an approved source in accordance with Article 162.2.B, "Mulch Sod."

B. Emulsified Asphalt. Furnish the type specified on the plans and meeting the requirements of Item 300, "Asphalts, Oils, and Emulsions."

C. Fertilizer. Furnish fertilizer in accordance with Article 166.2, "Materials," if specified on the plans.

D. Water. Furnish water required for proper compaction, promotion of plant growth, or emulsion dilution in accordance with Article 168.2, "Materials."

134.3. Construction. Haul the backfill material to the required location before placing the finish surface course unless directed otherwise. After placing the finish surface course, spread, compact, and shape the backfill material in accordance with the typical sections.

A. Types A and B Backfill. After placing the finish surface course, bring the backfill material to the approved moisture content. Shape to the lines and grades shown on the plans, and compact as directed. After compacting the backfill, blade the roadway side-slopes to a smooth surface.

B. Type C Backfill. Place mulch sod in a uniform windrow, and keep moist as directed. After placing the finish surface course, cultivate the area to receive mulch sod to a depth of 4 in. Blade and shape the mulch sod across the area in varying depths as shown on the typical sections to produce a smooth and uniform slope. Roll with a light roller or other suitable equipment. After applying fertilizer, moisten to the maximum depth of the backfill as directed.

C. Fertilizer. When fertilizer is specified on the plans, after final finishing of the backfill material, distribute the fertilizer uniformly in accordance with Article 166.3, "Construction." After applying fertilizer, moisten to a depth of 4in. or to the maximum depth of the backfill, whichever is less.

D. Emulsified Asphalt. When specified on the plans, after final finishing of the backfill material, apply the emulsified asphalt mixture in accordance with Article 314.4, "Construction," at the specified amount and rate of application as shown on the plans.

134.4. Measurement. This Item will be measured by the 100-ft. station along the baseline of each roadbed.

134.5. Payment. The work performed and materials furnished in accordance with this Item and measured as provided under "Measurement" will be paid for at the unit price bid for "Backfill" of the type specified. This price is full compensation for furnishing the emulsified asphalt, water, fertilizer, and backfill material; and for equipment, labor, materials, tools, and incidentals.

ITEM 161

COMPOST

161.1. Description. Furnish and place compost as shown on the plans.

161.2. Materials. Furnish compost that has been produced by aerobic (biological) decomposition of organic matter and meets the requirements of Table 1. Compost feedstock may include, but is not limited to, leaves and yard trimmings, biosolids, food scraps, food-processing residuals, manure or other agricultural residuals, forest residues, bark, and paper. Ensure compost and wood chips do not contain any visible refuse, other physical contaminants, or any substance considered harmful to plant growth. Do not use materials that have been treated with chemical preservatives as a compost feedstock or as wood chips. Do not use mixed municipal solid waste compost. Provide compost meeting all applicable 40 CFR 503 standards for Class A biosolids and TCEQ health and safety regulations as defined in the TAC, Chapter 332, including the time and temperature standards in Subchapter B, Part 23. Meet the requirements of the United States Composting Council (USCC) Seal of Testing Assurance (STA) program.

Before delivery of the compost, provide quality control (QC) documentation that includes the following:

- the feedstock by percentage in the final compost product,
- a statement that the compost meets federal and state health and safety regulations,
- a statement that the composting process has met time and temperature requirements,
- a copy of the producer's STA certification, and
- a copy of the lab analysis, performed by an STA-certified lab, verifying that the compost meets the requirements of Table 1.

When furnishing biosolids compost, also provide a copy of the current TCEQ compliance statement signed by the facility manager.

Table 1
Physical Requirements for Compost

Property	Test Method	Requirement
Particle Size	TMECC[1] 02.02-B, "Sample Sieving for Aggregate Size Classification"	95% passing 5/8 in. 70% passing 3/8 in.
Heavy Metals Content	TMECC 04.06, "Heavy Metals and Hazardous Elements": 04.06-As, Arsenic 04.06-Cd, Cadmium 04.06-Cu, Copper 04.06-Pb, Lead 04.06-Hg, Mercury 04.06-Mo, Molybdenum 04.06-Ni, Nickel 04.06-Se, Selenium 04.06-Zn, Zinc	Pass
Soluble Salts	TMECC 04.10-A, "1:5 Slurry Method, Mass Basis"	5.0 dS/m maximum[2]
pH	TMECC 04.11-A, "1:5 Slurry pH"	5.5–8.5
Maturity	TMECC 05.05-A, "Germination and Root Elongation"	> 80%
Organic Matter Content	TMECC 05.07-A, "Loss-On-Ignition Organic Matter Method"	25–65% (dry mass)
Stability	TMECC 05.08-B, "Carbon Dioxide Evolution Rate"	8 or below
Fecal Coliform	TMECC 07.01-B, "Fecal Coliforms"	Pass

1. "Test Methods for the Examination of Composting and Compost," published by the United States Department of Agriculture and the USCC.
2. A soluble salt content up to 10.0 dS/m for compost used in compost manufactured topsoil will be acceptable.

Provide a designated project stockpile of unblended compost for sampling and testing at the producer's site. The Department will take samples from each stockpile for quality assurance (QA). Make payment to the STA-certified lab chosen by the Department for the required QA testing. Submit lab invoices for passing QA tests to the Department for reimbursement.

Maintain compost in designated stockpiles at the producer's site until accepted by the Engineer. The Engineer reserves the right to sample compost at the jobsite.

A. Compost Manufactured Topsoil (CMT). CMT will consist of 75% topsoil blended with 25% compost measured by volume. Use CMT that is either blended on-site (BOS), blended in-place (BIP), or pre-blended (PB), as specified on the plans. Use topsoil conforming to Article 160.2, "Materials."

B. Erosion Control Compost (ECC). ECC will consist of 50% untreated wood chips blended with 50% compost measured by volume. Use wood chips less than or equal to 5 in. in length with 95% passing a 2-in. screen and less than 30% passing a 1-in. screen.

C. General Use Compost (GUC). GUC will consist of 100% compost.

161.3. Construction. Prepare the types of compost for use on the project and stockpile at the jobsite.

A. Compost Manufactured Topsoil (CMT). After excavation and embankment work is complete, remove and dispose of objectionable material from the topsoil before blending. Roll the CMT with a light corrugated drum.

1. **Blended On-Site (BOS).** Furnish topsoil. Topsoil may be salvaged from excavation and embankment areas, in accordance with Item 160, "Topsoil." Apply CMT to the depth shown on plans or apply compost in a uniform layer and incorporate into the in place topsoil to the depth shown on plans.

2. **Blended In-Place (BIP).** Apply compost in a uniform layer and incorporate into the existing in place topsoil to the depth shown on the plans.
3. **Pre-blended (PB).** Apply CMT in a uniform layer to the depth shown on the plans.

B. Erosion Control Compost (ECC). Use only on slopes 3:1 or flatter. After excavation and embankment work is complete, apply a 2-in. uniform layer, unless otherwise shown on the plans or as directed. When rolling is specified, use a light roller or other suitable equipment.

C. General Use Compost (GUC). Apply in a uniform layer as a top dressing on established vegetation to the depth shown on the plans. Do not bury existing vegetation. If using GUC as a backfill ingredient, in a planting soil mixture, for planting bed preparation, or as mulch, apply as shown on the plans.

161.4. Measurement. This Item will be measured by the 100-ft. station along the baseline of each roadbed, by the square yard complete in place, or by the cubic yard in vehicles at the point of delivery.

For CMT (BOS and PB only) and ECC cubic yard measurement, the quantity will be the composite material, compost and topsoil or wood chips.

161.5. Payment. The work performed and materials furnished in accordance with this Item and measured as provided under "Measurement" will be paid for at the unit price bid for "Compost Manufactured Topsoil (BOS)," "Compost Manufactured Topsoil (BIP)," "Compost Manufactured Topsoil (PB)," " Compost Manufactured Topsoil (BOS or PB)," "Erosion Control Compost," and "General Use Compost" for the depth specified, except for measurement by the cubic yard. This price is full compensation for loading, hauling, stockpiling, blending, placing, rolling, sprinkling, equipment, labor, materials (including topsoil for CMT (BOS and PB only) and wood chips for ECC), tools, and incidentals. Costs associated with passing QA testing will be paid for in accordance with the requirements of Article 9.5, "Force Account," at invoice price with no add-ons.

ITEM 164

SEEDING FOR EROSION CONTROL

164.1. Description. Provide and install temporary or permanent seeding for erosion control as shown on the plans or as directed.

164.2. Materials.

A. Seed. Provide seed from the previous season's crop meeting the requirements of the Texas Seed Law, including the testing and labeling for pure live seed (PLS = Purity x Germination). Furnish seed of the designated species, in labeled unopened bags or containers to the Engineer before planting. Use within 12 mo. From the date of the analysis. When Buffalograss is specified, use seed that is treated with KNO_3 (potassium nitrate) to overcome dormancy.

Use Tables 1 through 4 to determine the appropriate seed mix and rates as specified on the plans.

Table 1
Permanent Rural Seed Mix

District and Planting Dates	Clay Soils		Sandy Soils	
	Species and Rates (lb. PLS/ac.)		Species and Rates (lb. PLS/ac.)	
1 (Paris) Feb. 1 – May 15	Green Sprangletop	0.3	Green Sprangletop	0.3
	Sideoats Grama (Haskell)	3.2	Bermudagrass	1.5
	Bermudagrass	1.8	Bahiagrass (Pensacola)	6.0
	Little Bluestem (Native)	1.7	Sand Lovegrass	0.6
	Illinois Bundleflower	1.0	Weeping Lovegrass (Ermelo)	0.8
			Partridge Pea	1.0
2 (Ft. Worth) Feb. 1 – May 15	Green Sprangletop	0.3	Green Sprangletop	0.3
	Sideoats Grama (El Reno)	2.7	Sand Lovegrass	0.5
	Bermudagrass	0.9	Bermudagrass	1.8
	Little Bluestem (Native)	1.0	Weeping Lovegrass (Ermelo)	0.8
	Blue Grama (Hachita)	0.9	Sand Dropseed	0.4
	Illinois Bundleflower	1.0	Partridge Pearl	1.0
3 (Wichita Falls) Feb. 1 – May 15	Green Sprangletop	0.3	Green Sprangletop	0.3
	Sideoats Grama (El Reno)	2.7	Bermudagrass	1.2
	Bermudagrass	0.9	Sand Dropseed	0.4
	Buffalograss (Texoka)	1.6	Sand Bluestem	2.4
	Western Wheatgrass	2.1	Sand Lovegrass	0.3
	Blue Grama (Hachita)	0.6	Weeping Lovegrass (Ermelo)	0.6
	Illinois Bundleflower	1.0	Purple Prairieclover	0.5
4 (Amarillo) Feb. 15 – May 15	Green Sprangletop	0.3	Green Sprangletop	0.3
	Sideoats Grama (El Reno)	3.6	Weeping Lovegrass (Ermelo)	0.8
	Blue Grama (Hachita)	1.2	Blue Grama (Hachita)	1.0
	Buffalograss (Texoka)	1.6	Sand Dropseed	0.3
	Illinois Bundleflower	1.0	Sand Bluestem	1.8
			Purple Prairieclover	0.5
5 (Lubbock) Feb. 15 – May 15	Green Sprangletop	0.3	Green Sprangletop	0.3
	Sideoats Grama (El Reno)	3.6	Weeping Lovegrass (Ermelo)	0.8
	Blue Grama (Hachita)	1.2	Blue Grama (Hachita)	1.0
	Buffalograss (Texoka)	1.6	Sand Dropseed	0.3
	Illinois Bundleflower	1.0	Sand Bluestem	1.8
			Purple Prairieclover	0.5

Table 1 (continued)
Permanent Rural Seed Mix

District and Planting Dates	Clay Soils		Sandy Soils	
	Species and Rates (lb. PLS/ac.)		Species and Rates (lb. PLS/ac.)	
6 (Odessa) Feb. 1 – May 15	Green Sprangletop	0.3	Green Sprangletop	0.3
	Sideoats Grama (Haskell)	2.3	Blue Grama	0.8
	Blue Grama (Hachita)	0.8	Sand Dropseed	0.4
	Alkali Sacaton	0.4	Weeping Lovegrass (Ermelo)	0.6
	Galleta	2.1	Indian Ricegrass	3.0
	Illinois Bundleflower	1.0	Purple Prairieclover	0.5
7 (San Angelo) Feb. 1 – May 1	Green Sprangletop	0.3	Green Sprangletop	0.3
	Sideoats Grama (Haskell)	2.7	Sideoats Grama (Haskell)	2.7
	Buffalograss (Texoka)	1.6	Weeping Lovegrass (Ermelo)	0.6
	Little Bluestem (Native)	1.7	Sand Dropseed	0.4
	Blue Grama (Hachita)	0.9	Purple Prairieclover	0.5
	Galleta	1.6		
	Illinois Bundleflower	1.0		
8 (Abilene) Feb. 1 – May 15	Green Sprangletop	0.3	Green Sprangletop	0.3
	Sideoats Grama (Haskell)	2.7	Sand Bluestem	3.0
	Blue Grama (Hachita)	0.9	Weeping Lovegrass (Ermelo)	1.2
	Galleta	1.6	Sand Dropseed	0.5
	Buffalograss (Texoka)	1.6	Purple Prairieclover	0.5
	Little Bluestem (Native)	1.7		
	Illinois Bundleflower	1.0		
9 (Waco) Feb. 1 – May 15	Green Sprangletop	0.3	Green Sprangletop	0.3
	Bermudagrass	1.2	Bermudagrass	2.4
	Sideoats Grama (Haskell)	3.6	Sand Dropseed	0.5
	Little Bluestem (Native)	2.0	Weeping Lovegrass (Ermelo)	0.8
	Illinois Bundleflower	1.0	Partridge Pea	1.0
10 (Tyler) Feb. 1 – May 15	Green Sprangletop	0.3	Green Sprangletop	0.3
	Bermudagrass	1.8	Bermudagrass	1.8
	Bahiagrass (Pensacola)	9.0	Bahiagrass (Pensacola)	9.0
	Sideoats Grama (Haskell)	2.7	Weeping Lovegrass (Ermelo)	0.5
	Illinois Bundleflower	1.0	Sand Lovegrass	0.5
			Lance-Leaf Coreopsis	1.0
11 (Lufkin) Feb. 1 – May 15	Green Sprangletop	0.3	Green Sprangletop	0.3
	Bermudagrass	1.8	Bermudagrass	2.1
	Bahiagrass (Pensacola)	9.0	Bahiagrass (Pensacola)	9.0
	Sideoats Grama (Haskell)	2.7	Sand Lovegrass	0.5
	Illinois Bundleflower	1.0	Lance-Leaf Coreopsis	1.0
12 (Houston) Jan. 15 – May 15	Green Sprangletop	0.3	Green Sprangletop	0.3
	Bermudagrass	2.1	Bermudagrass	2.4
	Sideoats Grama (Haskell)	3.2	Bahiagrass (Pensacola)	10.5
	Little Bluestem (Native)	1.4	Weeping Lovegrass (Ermelo)	0.5
	Illinois Bundleflower	1.0	Lance-Leaf Coreopsis	1.0
13 (Yoakum) Jan. 15 – May 15	Green Sprangletop	0.3	Green Sprangletop	0.3
	Sideoats Grama (Haskell)	3.6	Bermudagrass	1.8
	Bermudagrass	1.8	Bahiagrass (Pensacola)	6.0
	Little Bluestem (Native)	1.4	Sand Lovegrass	0.6
	Illinois Bundleflower	1.0	Weeping Lovegrass (Ermelo)	0.6
			Partridge Pea	1.0

Table 1 (continued)
Permanent Rural Seed Mix

District and Planting Dates	Clay Soils		Sandy Soils	
	Species and Rates (lb. PLS/ac.)		Species and Rates (lb. PLS/ac.)	
14 (Austin) Feb. 1 – May 15	Green Sprangletop	0.3	Green Sprangletop	0.3
	Bermudagrass	0.9	Bermudagrass	2.4
	Sideoats Grama (Haskell)	2.7	Weeping Lovegrass (Ermelo)	0.8
	Little Bluestem (Native)	1.0	Sand Lovegrass	0.8
	Blue Grama (Hachita)	0.9	Partridge Pea	1.0
	Illinois Bundleflower	1.0		
15 (San Antonio) Feb. 1 – May 1	Green Sprangletop	0.3	Green Sprangletop	0.3
	Bermudagrass	1.2	Bermudagrass	1.8
	Sideoats Grama (Haskell)	2.7	Lehmanns Lovegrass	0.6
	Little Bluestem (Native)	1.4	Sand Lovegrass	0.6
	Plains Bristlegrass	1.2	Buffelgrass (Common)	0.4
	Illinois Bundleflower	1.0	Partridge Pea	1.0
16 (Corpus Christi) Jan. 1 – May 1	Green Sprangletop	0.3	Green Sprangletop	0.3
	Sideoats Grama (Haskell)	2.7	Bermudagrass	1.8
	Bermudagrass	1.8	Buffelgrass (Common)	0.4
	Buffalograss (Texoka)	1.6	Sand Lovegrass	0.6
	Plains Bristlegrass	1.2	Lehmanns Lovegrass	0.6
	Illinois Bundleflower	1.0	Purple Prairieclover	0.5
17 (Bryan) Feb. 1 – May 15	Green Sprangletop	0.3	Green Sprangletop	0.3
	Bermudagrass	1.5	Bermudagrass	1.5
	Sideoats Grama (Haskell)	3.6	Bahiagrass (Pensacola)	7.5
	Little Bluestem (Native)	1.7	Weeping Lovegrass (Ermelo)	0.6
	Illinois Bundleflower	1.0	Sand Lovegrass	0.6
			Lance-Leaf Coreopsis	1.0
18 (Dallas) Feb. 1 – May 15	Green Sprangletop	0.3	Green Sprangletop	0.3
	Bermudagrass	1.2	Bermudagrass	1.8
	Sideoats Grama (El Reno)	2.7	Weeping Lovegrass (Ermelo)	0.6
	Little Bluestem (Native)	2.0	Sand Lovegrass	0.6
	Buffalograss (Texoka)	1.6	Sand Dropseed	0.4
	Illinois Bundleflower	1.0	Partridge Pea	1.0
19 (Atlanta) Feb. 1 – May 15	Green Sprangletop	0.3	Green Sprangletop	0.3
	Bermudagrass	2.4	Bermudagrass	2.1
	Sideoats Grama (Haskell)	4.5	Bahiagrass (Pensacola)	7.5
	Illinois Bundleflower	1.0	Sand Lovegrass	0.6
			Lance-Leaf Coreopsis	1.0
20 (Beaumont) Jan. 15 – May 15	Green Sprangletop	0.3	Green Sprangletop	0.3
	Bermudagrass	2.7	Bermudagrass	2.1
	Sideoats Grama (Haskell)	4.1	Bahiagrass (Pensacola)	7.5
	Illinois Bundleflower	1.0	Sand Lovegrass	0.6
			Lance-Leaf Coreopsis	1.0
21 (Pharr) Jan. 15 – May 15	Green Sprangletop	0.3	Green Sprangletop	0.3
	Sideoats Grama (Haskell)	3.6	Bermudagrass	1.8
	Plains Bristlegrass	1.2	Buffelgrass (Common)	0.4
	Buffalograss (Texoka)	1.6	Sand Dropseed	0.4
	Bermudagrass	1.2	Lehmanns Lovegrass	0.6
	Illinois Bundleflower	1.0	Purple Prairieclover	0.5

Table 1 (continued)
Permanent Rural Seed Mix

District and Planting Dates	Clay Soils		Sandy Soils	
	Species and Rates (lb. PLS/ac.)		Species and Rates (lb. PLS/ac.)	
22 (Laredo) Jan. 15 – May 1	Green Sprangletop	0.3	Green Sprangletop	0.3
	Sideoats Grama (Haskell)	3.6	Bermudagrass	1.8
	Bermudagrass	1.2	Buffelgrass (Common)	0.4
	Buffalograss (Texoka)	1.6	Sand Dropseed	0.4
	Plains Bristlegrass	1.2	Lehmanns Lovegrass	0.6
	Illinois Bundleflower	1.0	Purple Prairieclover	0.5
23 (Brownwood) Feb. 1 – May 15	Green Sprangletop	0.3	Green Sprangletop	0.3
	Sideoats Grama (Haskell)	2.7	Bermudagrass	1.8
	Bermudagrass	0.6	Weeping Lovegrass (Ermelo)	0.6
	Blue Grama (Hachita)	0.9	Sand Lovegrass	0.6
	Galleta	2.1	Sand Dropseed	0.4
	Illinois Bundleflower	1.0	Purple Prairieclover	0.5
24 (El Paso) Feb. 1 – May 15	Green Sprangletop	0.3	Green Sprangletop	0.3
	Sideoats Grama (Butte)	2.7	Sand Dropseed	0.4
	Blue Grama (Hachita)	0.9	Lehmanns Lovegrass	0.9
	Galleta	2.1	Blue Grama (Hachita)	1.0
	Alkali Sacaton	0.4	Indian Ricegrass	1.6
	Illinois Bundleflower	1.0	Purple Prairieclover	0.5
25 (Childress) Feb. 1 – May 15	Green Sprangletop	0.3	Green Sprangletop	0.3
	Sideoats Grama (El Reno)	2.7	Weeping Lovegrass (Ermelo)	1.2
	Blue Grama (Hachita)	0.9	Sand Dropseed	0.5
	Western Wheatgrass	2.1	Sand Lovegrass	0.8
	Galleta	1.6	Purple Prairieclover	0.5
	Illinois Bundleflower	1.0		

Table 2
Permanent Urban Seed Mix

District and Planting Dates	Clay Soils Species and Rates (lb. PLS/ac.)		Sandy Soils Species and Rates (lb. PLS/ac.)	
1 (Paris) Feb. 1 – May 15	Green Sprangletop	0.3	Green Sprangletop	0.3
	Bermudagrass	2.4	Bermudagrass	5.4
	Sideoats Grama (Haskell)	4.5		
2 (Ft. Worth) Feb. 1 – May 15	Green Sprangletop	0.3	Green Sprangletop	0.3
	Sideoats Grama (El Reno)	3.6	Sideoats Grama (El Reno)	3.6
	Bermudagrass	2.4	Bermudagrass	2.1
	Buffalograss (Texoka)	1.6	Sand Dropseed	0.3
3 (Wichita Falls) Feb. 1 – May 15	Green Sprangletop	0.3	Green Sprangletop	0.3
	Sideoats Grama (El Reno)	4.5	Sideoats Grama (El Reno)	3.6
	Bermudagrass	1.8	Bermudagrass	1.8
	Buffalograss (Texoka)	1.6	Sand Dropseed	0.4
4 (Amarillo) Feb. 15 – May 15	Green Sprangletop	0.3	Green Sprangletop	0.3
	Sideoats Grama (El Reno)	3.6	Sideoats Grama (El Reno)	2.7
	Blue Grama (Hachita)	1.2	Blue Grama (Hachita)	0.9
	Buffalograss (Texoka)	1.6	Sand Dropseed	0.4
			Buffalograss (Texoka)	1.6
5 (Lubbock) Feb. 15 – May 15	Green Sprangletop	0.3	Green Sprangletop	0.3
	Sideoats Grama (El Reno)	3.6	Sideoats Grama (El Reno)	2.7
	Blue Grama (Hachita)	1.2	Blue Grama (Hachita)	0.9
	Buffalograss (Texoka)	1.6	Sand Dropseed	0.4
			Buffalograss (Texoka)	1.6
6 (Odessa) Feb. 1 – May 15	Green Sprangletop	0.3	Green Sprangletop	0.3
	Sideoats Grama (Haskell)	3.6	Sideoats Grama (Haskell)	2.7
	Blue Grama (Hachita)	1.2	Sand Dropseed	0.4
	Buffalograss (Texoka)	1.6	Blue Grama (Hachita)	0.9
			Buffalograss (Texoka)	1.6
7 (San Angelo) Feb. 1 – May 1	Green Sprangletop	0.3	Green Sprangletop	0.3
	Sideoats Grama (Haskell)	7.2	Sideoats Grama (Haskell)	3.2
	Buffalograss (Texoka)	1.6	Sand Dropseed	0.3
			Blue Grama (Hachita)	0.9
			Buffalograss (Texoka)	1.6

Table 2 (continued)
Permanent Urban Seed Mix

District and Planting Dates	Clay Soils Species and Rates (lb. PLS/ac.)		Sandy Soils Species and Rates (lb. PLS/ac.)	
8 (Abilene) Feb. 1 – May 15	Green Sprangletop	0.3	Green Sprangletop	0.3
	Sideoats Grama (Haskell)	3.6	Sand Dropseed	0.3
	Blue Grama (Hachita)	1.2	Sideoats Grama (Haskell)	3.6
	Buffalograss (Texoka)	1.6	Blue Grama (Hachita)	0.8
			Buffalograss (Texoka)	1.6
9 (Waco) Feb. 1 – May 15	Green Sprangletop	0.3	Green Sprangletop	0.3
	Bermudagrass	1.8	Buffalograss (Texoka)	1.6
	Buffalograss (Texoka)	1.6	Bermudagrass	3.6
	Sideoats Grama (Haskell)	4.5	Sand Dropseed	0.4
10 (Tyler) Feb. 1 – May 15	Green Sprangletop	0.3	Green Sprangletop	0.3
	Bermudagrass	2.4	Bermudagrass	5.4
	Sideoats Grama (Haskell)	4.5		
11 (Lufkin) Feb. 1 – May 15	Green Sprangletop	0.3	Green Sprangletop	0.3
	Bermudagrass	2.4	Bermudagrass	5.4
	Sideoats Grama (Haskell)	4.5		
12 (Houston) Jan. 15 – May 15	Green Sprangletop	0.3	Green Sprangletop	0.3
	Sideoats Grama (Haskell)	4.5	Bermudagrass	5.4
	Bermudagrass	2.4		
13 (Yoakum) Jan. 15 – May 15	Green Sprangletop	0.3	Green Sprangletop	0.3
	Sideoats Grama (Haskell)	4.5	Bermudagrass	5.4
	Bermudagrass	2.4		
14 (Austin) Feb. 1 – May 15	Green Sprangletop	0.3	Green Sprangletop	0.3
	Bermudagrass	2.4	Bermudagrass	4.8
	Sideoats Grama (Haskell)	3.6	Buffalograss (Texoka)	1.6
	Buffalograss (Texoka)	1.6		
15 (San Antonio) Feb. 1 – May 1	Green Sprangletop	0.3	Green Sprangletop	0.3
	Sideoats Grama (Haskell)	3.6	Bermudagrass	4.8
	Bermudagrass	2.4	Buffalograss (Texoka)	1.6
	Buffalograss (Texoka)	1.6		
16 (Corpus Christi) Jan. 1 – May 1	Green Sprangletop	0.3	Green Sprangletop	0.3
	Sideoats Grama (Haskell)	3.6	Bermudagrass	4.8
	Bermudagrass	2.4	Buffalograss (Texoka)	1.6
	Buffalograss (Texoka)	1.6		

Table 2 (continued)
Permanent Urban Seed Mix

District and Planting Dates	Clay Soils Species and Rates (lb. PLS/ac.)		Sandy Soils Species and Rates (lb. PLS/ac.)	
17 (Bryan) Feb. 1 – May 15	Green Sprangletop	0.3	Green Sprangletop	0.3
	Bermudagrass	2.4	Bermudagrass	5.4
	Sideoats Grama (Haskell)	4.5		
18 (Dallas) Feb. 1 – May 15	Green Sprangletop	0.3	Green Sprangletop	0.3
	Sideoats Grama (El Reno)	3.6	Buffalograss (Texoka)	1.6
	Buffalograss (Texoka)	1.6	Bermudagrass	3.6
	Bermudagrass	2.4	Sand Dropseed	0.4
19 (Atlanta) Feb. 1 – May 15	Green Sprangletop	0.3	Green Sprangletop	0.3
	Bermudagrass	2.4	Bermudagrass	5.4
	Sideoats Grama (Haskell)	4.5		
20 (Beaumont) Jan. 15 – May 15	Green Sprangletop	0.3	Green Sprangletop	0.3
	Bermudagrass	2.4	Bermudagrass	5.4
	Sideoats Grama (Haskell)	4.5		
21 (Pharr) Jan. 15 – May 15	Green Sprangletop	0.3	Green Sprangletop	0.3
	Sideoats Grama (Haskell)	3.6	Buffalograss (Texoka)	1.6
	Buffalograss (Texoka)	1.6	Bermudagrass	3.6
	Bermudagrass	2.4	Sand Dropseed	0.4
22 (Laredo) Jan. 15 – May 1	Green Sprangletop	0.3	Green Sprangletop	0.3
	Sideoats Grama (Haskell)	4.5	Buffalograss (Texoka)	1.6
	Buffalograss (Texoka)	1.6	Bermudagrass	3.6
	Bermudagrass	1.8	Sand Dropseed	0.4
23 (Brownwood) Feb. 1 – May 15	Green Sprangletop	0.3	Green Sprangletop	0.3
	Sideoats Grama (Haskell)	3.6	Buffalograss (Texoka)	1.6
	Bermudagrass	1.2	Bermudagrass	3.6
	Blue Grama (Hachita)	0.9	Sand Dropseed	0.4
24 (El Paso) Feb. 1 – May 15	Green Sprangletop	0.3	Green Sprangletop	0.3
	Sideoats Grama (Butte)	3.6	Buffalograss (Texoka)	1.6
	Blue Grama (Hachita)	1.2	Sand Dropseed	0.4
	Buffalograss (Texoka)	1.6	Blue Grama (Hachita)	1.8
25 (Childress) Feb. 1 – May 15	Green Sprangletop	0.3	Green Sprangletop	0.3
	Sideoats Grama (El Reno)	3.6	Sand Dropseed	0.4
	Blue Grama (Hachita)	1.2	Buffalograss (Texoka)	1.6
	Buffalograss (Texoka)	1.6	Bermudagrass	1.8

Table 3
Temporary Cool Season Seeding

Districts	Dates	Seed Mix and Rates (lb./ac.)	
Paris (1), Amarillo (4), Lubbock (5), Dallas (18)	September 1 – November 30	Tall Fescue Western Wheatgrass Wheat (Red, Winter)	4.5 5.6 34
Odessa (6), San Angelo (7), El Paso (24)	September 1 – November 30	Western Wheatgrass Wheat (Red, Winter)	8.4 50
Waco (9), Tyler (10), Lufkin (11), Austin (14), San Antonio (15), Bryan (17), Atlanta (19)	September 1 – November 30	Tall Fescue Oats Wheat	4.5 24 34
Houston (12), Yoakum (13), Corpus Christi (16), Beaumont (20), Pharr (21), Laredo (22)	September 1 – November 30	Oats	72
Ft. Worth (2), Wichita Falls (3), Abilene (8), Brownwood (23), Childress (25)	September 1 – November 30	Tall Fescue Western Wheatgrass Cereal Rye	4.5 5.6 34

Table 4
Temporary Warm Season Seeding

Districts	Dates	Seed Mix and Rates (lb./ac.)	
All	May 1 – August 31	Foxtail Millet	34

B. Fertilizer. Use fertilizer in conformance with Article 166.2, "Materials."

C. Vegetative Watering. Use water that is clean and free of industrial wastes and other substances harmful to the growth of vegetation.

D. Mulch.

1. **Straw or Hay Mulch.** Use straw or hay mulch in conformance with Article 162.2.E, "Mulch."
2. **Cellulose Fiber Mulch.** Use only cellulose fiber mulches that are on the approved list published in "Field Performance of Erosion Control Products," available from the Maintenance Division. Submit 1 full set of manufacturer's literature for the selected material. Keep mulch dry until applied. Do not use molded or rotted material.

E. Tacking Methods. Use a tacking agent applied in accordance with the manufacturer's recommendations or a crimping method on all straw or hay mulch operations. Tacking agents must be approved before use, or specified on the plans.

164.3. Construction. Cultivate the area to a depth of 4 in. before placing the seed unless otherwise directed. When performing permanent seeding after an established temporary seeding, cultivate the seedbed to a depth of 4 in. or mow the area before placement of the permanent seed. Plant the seed specified and mulch, if required, after the area has been completed to lines and grades as shown on the plans.

A. Broadcast Seeding. Distribute the seed or seed mixture uniformly over the areas shown on the plans using hand or mechanical distribution or hydro-seeding on top of the soil. When seed and water are to be distributed as a slurry during hydro-seeding, apply the mixture to the area to be seeded within 30 min. of placement of components in the equipment. Roll the planted area with a light roller or other suitable equipment. Roll sloped areas along the contour of the slopes.

B. Straw or Hay Mulch Seeding. Plant seed according to Section 164.3.A, "Broadcast Seeding." Immediately after planting the seed or seed mixture, apply straw or hay mulch uniformly over the seeded area. Apply straw mulch at 2 to 2.5 tons per acre. Apply hay mulch at 1.5 to 2 tons per acre. Use a tacking method over the mulched area.

C. Cellulose Fiber Mulch Seeding. Plant seed according to Section 164.3.A, "Broadcast Seeding." Immediately after planting the seed or seed mixture, apply cellulose fiber mulch uniformly over the seeded area at the following rates:

- Sandy Soils with slopes of 3:1 or less—2500 lb. per acre.
- Sandy Soils with slopes greater than 3:1—3000 lb. per acre.
- Clay Soils with slopes of 3:1 or less—2000 lb. per acre.
- Clay Soils with slopes greater than 3:1—2300 lb. per acre.

Cellulose fiber mulch rates are based on dry weight of mulch per acre. Mix cellulose fiber mulch and water to make a slurry and apply uniformly over the seeded area using suitable equipment.

D. Drill Seeding. Plant seed or seed mixture uniformly over the area shown on the plans at a depth of 1/4 to 1/3 in. using a pasture or rangeland type drill. Plant seed along the contour of the slopes.

E. Straw or Hay Mulching. Apply straw or hay mulch uniformly over the area as indicated on the plans. Apply straw mulch at 2 to 2.5 tons per acre. Apply hay mulch at 1.5 to 2 tons per acre. Use a tacking method over the mulched area.

Apply fertilizer in conformance with Article 166.3, "Construction." Seed and fertilizer may be distributed simultaneously during "Broadcast Seeding" operations, provided each component is applied at the specified rate. When temporary and permanent seeding are both specified for the same area, apply half of the required fertilizer during the temporary seeding operation and the other half during the permanent seeding operation.

Water the seeded areas at the rates and frequencies as shown on the plans or as directed.

164.4. Measurement. This Item will be measured by the square yard or by the acre.

164.5. Payment. The work performed and the materials furnished in accordance with this Item and measured as provided under "Measurement" will be paid for at the unit price bid for "Broadcast Seeding (Perm)" of the rural or urban seed mixture and sandy or clay soil specified, "Broadcast Seeding (Temp)" of warm or cool season specified, "Straw or Hay Mulch Seeding (Perm)" of the rural or urban seed mixture and sandy or clay soil specified, "Straw or Hay Mulch Seeding (Temp)" of warm or cool season specified, "Cellulose Fiber Mulch Seeding (Perm)" of the rural or urban seed mixture and sandy or clay soil specified, "Cellulose Fiber Mulch Seeding (Temp)" of warm or cool season specified, "Drill Seeding (Perm)" of the rural or urban seed mixture and sandy or clay soil specified, "Drill Seeding (Temp)" of warm or cool season specified, and "Straw or Hay Mulching." This price is full compensation for furnishing materials, including water for hydro-seeding and hydro-mulching operations, mowing, labor, equipment, tools, supplies, and incidentals. Fertilizer will not be paid for directly but will be subsidiary to this Item. Water for irrigating the seeded area, when specified, will be paid for under Item 168, "Vegetative Watering."

ITEM 166
FERTILIZER

166.1. Description. Provide and distribute fertilizer over areas specified on the plans.

166.2. Materials. Use a complete fertilizer containing nitrogen (N), phosphoric acid (P), and potash (K) nutrients unless otherwise specified on the plans. At least 50% of the nitrogen component must be of a slow-release formulation such as urea-based and plastic resin-coated fertilizers. Ensure that fertilizer is in an acceptable condition for distribution in containers labeled with the analysis. Fertilizer is subject to testing by the Texas A&M Feed and Fertilizer Control Service in accordance with the Texas Fertilizer Law.

166.3. Construction. Deliver and apply the complete fertilizer uniformly at a rate equal to 100 lb. of nitrogen per acre or at the analysis and rate specified on the plans.

166.4. Measurement. When fertilizer is specified on the plans to be a pay item, measurement will be by the acre of surface area covered or by the ton (2,000 lb.). Measurement by the ton will use guaranteed weight of bags or containers as shown by the manufacturer or certified scales meeting the requirements of Item 520, “Weighing and Measuring Equipment,” unless otherwise approved.

166.5. Payment. Unless otherwise specified on the plans, the work performed, materials furnished, equipment, labor, tools, and incidentals will not be paid for directly but will be considered subsidiary to bid items of the Contract.

When fertilizer is specified on the plans to be a pay item, the work performed and materials furnished in accordance with this Item and measured as provided under “Measurement” will be paid for at the unit price bid for “Fertilizer.” This price is full compensation for furnishing materials and performing operations.

ITEM 247

FLEXIBLE BASE

247.1. Description. Construct a foundation course composed of flexible base.

247.2. Materials. Furnish uncontaminated materials of uniform quality that meet the requirements of the plans and specifications. Notify the Engineer of the proposed material sources and of changes to material sources. The Engineer may sample and test project materials at any time before compaction throughout the duration of the project to assure specification compliance. Use Tex-100-E material definitions.

A. Aggregate. Furnish aggregate of the type and grade shown on the plans and conforming to the requirements of Table 1. Each source must meet Table 1 requirements for liquid limit, plasticity index, and wet ball mill for the grade specified. Do not use additives such as but not limited to lime, cement, or fly ash to modify aggregates to meet the requirements of Table 1, unless shown on the plans.

Table 1
Material Requirements

Property	Test Method	Grade 1	Grade 2	Grade 3	Grade 4
Master gradation sieve size (% retained)	Tex-110-E				As shown on the plans
2-1/2 in.		–	0	0	
1-3/4 in.		0	0–10	0–10	
7/8 in.		10–35	–	–	
3/8 in.		30–50	–	–	
No. 4		45–65	45–75	45–75	
No. 40		70–85	60–85	50–85	
Liquid limit, % max.[1]	Tex-104-E	35	40	40	As shown on the plans
Plasticity index, max.[1]	Tex-106-E	10	12	12	As shown on the plans
Plasticity index, min.[1]		As shown on the plans			
Wet ball mill, % max.[2]	Tex-116-E	40	45	–	As shown on the plans
Wet ball mill, % max. increase passing the No. 40 sieve		20	20	–	
Classification[3]	Tex-117-E	1.0	1.1–2.3	–	As shown on the plans
Min. compressive strength[3], psi					As shown on the plans
lateral pressure 0 psi		45	35	–	
lateral pressure 15 psi		175	175	–	

1. Determine plastic index in accordance with Tex-107-E (linear shrinkage) when liquid limit is unattainable as defined in Tex-104-E.
2. When a soundness value is required by the plans, test material in accordance with Tex-411-A.
3. Meet both the classification and the minimum compressive strength, unless otherwise shown on the plans.

1. Material Tolerances. The Engineer may accept material if no more than 1 of the 5 most recent gradation tests has an individual sieve outside the specified limits of the gradation.

When target grading is required by the plans, no single failing test may exceed the master grading by more than 5 percentage points on sieves No. 4 and larger or 3 percentage points on sieves smaller than No. 4.

The Engineer may accept material if no more than 1 of the 5 most recent plasticity index tests is outside the specified limit. No single failing test may exceed the allowable limit by more than 2 points.

2. **Material Types.** Do not use fillers or binders unless approved. Furnish the type specified on the plans in accordance with the following.

   a. **Type A.** Crushed stone produced and graded from oversize quarried aggregate that originates from a single, naturally occurring source. Do not use gravel or multiple sources.

   b. **Type B.** Crushed or uncrushed gravel. Blending of 2 or more sources is allowed.

   c. **Type C.** Crushed gravel with a minimum of 60% of the particles retained on a No. 4 sieve with 2 or more crushed faces as determined by Tex-460-A, Part I. Blending of 2 or more sources is allowed.

   d. **Type D.** Type A material or crushed concrete. Crushed concrete containing gravel will be considered Type D material. Crushed concrete must meet the requirements in Section 247.2.A.3.b, "Recycled Material (Including Crushed Concrete) Requirements," and be managed in a way to provide for uniform quality. The Engineer may require separate dedicated stockpiles in order to verify compliance.

   e. **Type E.** As shown on the plans.

3. **Recycled Material.** Recycled asphalt pavement (RAP) and other recycled materials may be used when shown on the plans. Request approval to blend 2 or more sources of recycled materials.

   a. **Limits on Percentage.** When RAP is allowed, do not exceed 20% RAP by weight unless otherwise shown on the plans. The percentage limitations for other recycled materials will be as shown on the plans.

   b. **Recycled Material (Including Crushed Concrete) Requirements.**

      (1) **Contractor Furnished Recycled Materials.** When the Contractor furnishes the recycled materials, including crushed concrete, the final product will be subject to the requirements of Table 1 for the grade specified. Certify compliance with DMS-11000, "Evaluating and Using Nonhazardous Recyclable Materials Guidelines," for Contractor furnished recycled materials. In addition, recycled materials must be free from reinforcing steel and other objectionable material and have at most 1.5% deleterious material when tested in accordance with Tex-413-A. For RAP, do not exceed a maximum percent loss from decantation of 5.0% when tested in accordance with Tex-406-A. Test RAP without removing the asphalt.

      (2) **Department Furnished Required Recycled Materials.** When the Department furnishes and requires the use of recycled materials, unless otherwise shown on the plans:
      - Department required recycled material will not be subject to the requirements in Table 1,
      - Contractor furnished materials are subject to the requirements in Table 1 and this Item,
      - the final product, blended, will be subject to the requirements in Table 1, and
      - for final product, unblended (100% Department furnished required recycled material), the liquid limit, plasticity index, wet ball mill, classification, and compressive strength is waived.

      Crush Department-furnished RAP so that 100% passes the 2 in. sieve. The Contractor is responsible for uniformly blending to meet the percentage required.

      (3) **Department Furnished and Allowed Recycled Materials.** When the Department furnishes and allows the use of recycled materials or allows the Contractor to furnish recycled materials, the final blended product is subject to the requirements of Table 1 and the plans.

   c. **Recycled Material Sources.** Department-owned recycled material is available to the Contractor only when shown on the plans. Return unused Department-owned recycled materials to the Department stockpile location designated by the Engineer unless otherwise shown on the plans.

The use of Contractor-owned recycled materials is allowed when shown on the plans. Contractor-owned surplus recycled materials remain the property of the Contractor. Remove Contractor-owned recycled materials from the project and dispose of them in accordance with federal, state, and local regulations before project acceptance. Do not intermingle Contractor-owned recycled material with Department-owned recycled material unless approved by the Engineer.

B. Water. Furnish water free of industrial wastes and other objectionable matter.

C. Material Sources. When non-commercial sources are used, expose the vertical faces of all strata of material proposed for use. Secure and process the material by successive vertical cuts extending through all exposed strata, when directed.

247.3. Equipment. Provide machinery, tools, and equipment necessary for proper execution of the work. Provide rollers in accordance with Item 210, "Rolling." Provide proof rollers in accordance with Item 216, "Proof Rolling," when required.

247.4. Construction. Construct each layer uniformly, free of loose or segregated areas, and with the required density and moisture content. Provide a smooth surface that conforms to the typical sections, lines, and grades shown on the plans or as directed.

Stockpile base material temporarily at an approved location before delivery to the roadway. Build stockpiles in layers no greater than 2 ft. thick. Stockpiles must have a total height between 10 and 16 ft. unless otherwise shown on the plans. After construction and acceptance of the stockpile, loading from the stockpile for delivery is allowed. Load by making successive vertical cuts through the entire depth of the stockpile.

Do not add or remove material from temporary stockpiles that require sampling and testing before delivery unless otherwise approved. Charges for additional sampling and testing required as a result of adding or removing material will be deducted from the Contractor's estimates.

Haul approved flexible base in clean trucks. Deliver the required quantity to each 100-ft. station or designated stockpile site as shown on the plans. Prepare stockpile sites as directed. When delivery is to the 100-ft. station, manipulate in accordance with the applicable Items.

A. Preparation of Subgrade or Existing Base. Remove or scarify existing asphalt concrete pavement in accordance with Item 105, "Removing Stabilized Base and Asphalt Pavement," when shown on the plans or as directed. Shape the subgrade or existing base to conform to the typical sections shown on the plans or as directed.

When new base is required to be mixed with existing base, deliver, place, and spread the new flexible base in the required amount per station. Manipulate and thoroughly mix the new base with existing material to provide a uniform mixture to the specified depth before shaping.

When shown on the plans or directed, proof roll the roadbed in accordance with Item 216, "Proof Rolling," before pulverizing or scarifying. Correct soft spots as directed.

B. Placing. Spread and shape flexible base into a uniform layer with an approved spreader the same day as delivered unless otherwise approved. Construct layers to the thickness shown on the plans. Maintain the shape of the course. Control dust by sprinkling, as directed. Correct or replace segregated areas as directed, at no additional expense to the Department.

Place successive base courses and finish courses using the same construction methods required for the first course.

C. Compaction. Compact using density control unless otherwise shown on the plans. Multiple lifts are permitted when shown on the plans or approved. Bring each layer to the moisture content directed. When necessary, sprinkle the material in accordance with Item 204, "Sprinkling."

Begin rolling longitudinally at the sides and proceed towards the center, overlapping on successive trips by at least 1/2 the width of the roller unit. On superelevated curves, begin rolling at the low side and progress toward the high side. Offset alternate trips of the roller. Operate rollers at a speed between 2 and 6 mph as directed.

Rework, recompact, and refinish material that fails to meet or that loses required moisture, density, stability, or finish before the next course is placed or the project is accepted. Continue work until specification requirements are met. Perform the work at no additional expense to the Department.

1. **Ordinary Compaction.** Roll with approved compaction equipment as directed. Correct irregularities, depressions, and weak spots immediately by scarifying the areas affected, adding or removing approved material as required, reshaping, and recompacting.
2. **Density Control.** Compact to at least 100% of the maximum density determined by Tex-113-E unless otherwise shown on the plans. Determine the moisture content of the material at the beginning and during compaction in accordance with Tex-103-E.

   The Engineer will determine roadway density of completed sections in accordance with Tex-115-E. The Engineer may accept the section if no more than 1 of the 5 most recent density tests is below the specified density and the failing test is no more than 3 pcf below the specified density.

D. Finishing. After completing compaction, clip, skin, or tight-blade the surface with a maintainer or subgrade trimmer to a depth of approximately 1/4 in. Remove loosened material and dispose of it at an approved location. Seal the clipped surface immediately by rolling with a pneumatic tire roller until a smooth surface is attained. Add small increments of water as needed during rolling. Shape and maintain the course and surface in conformity with the typical sections, lines, and grades as shown on the plans or as directed.

In areas where surfacing is to be placed, correct grade deviations greater than 1/4 in. in 16 ft. measured longitudinally or greater than 1/4 in. over the entire width of the cross-section. Correct by loosening, adding, or removing material. Reshape and recompact in accordance with Section 247.4.C, "Compaction."

E. Curing. Cure the finished section until the moisture content is at least 2 percentage points below optimum or as directed before applying the next successive course or prime coat.

247.5. Measurement. Flexible base will be measured as follows:

- **Flexible Base (Complete In Place).** The ton, square yard, or any cubic yard method.
- **Flexible Base (Roadway Delivery).** The ton or cubic yard in vehicle.
- **Flexible Base (Stockpile Delivery).** The ton, cubic yard in vehicle, or cubic yard in stockpile.

Measurement by the cubic yard in final position and square yard is a plans quantity measurement. The quantity to be paid for is the quantity shown in the proposal unless modified by Article 9.2, "Plans Quantity Measurement." Additional measurements or calculations will be made if adjustments of quantities are required.

Measurement is further defined for payment as follows.

A. Cubic Yard in Vehicle. By the cubic yard in vehicles of uniform capacity at the point of delivery.

B. Cubic Yard in Stockpile. By the cubic yard in the final stockpile position by the method of average end areas.

C. Cubic Yard in Final Position. By the cubic yard in the completed and accepted final position. The volume of base course is computed in place by the method of average end areas between the original subgrade or existing base surfaces and the lines, grades, and slopes of the accepted base course as shown on the plans.

D. Square Yard. By the square yard of surface area in the completed and accepted final position. The surface area of the base course is based on the width of flexible base as shown on the plans.

E. Ton. By the ton of dry weight in vehicles as delivered. The dry weight is determined by deducting the weight of the moisture in the material at the time of weighing from the gross weight of the material. The Engineer will determine the moisture content in the material in accordance with Tex-103-E from samples taken at the time of weighing.

When material is measured in trucks, the weight of the material will be determined on certified scales, or the Contractor must provide a set of standard platform truck scales at a location approved by the

Engineer. Scales must conform to the requirements of Item 520, “Weighing and Measuring Equipment.”

247.6. Payment. The work performed and materials furnished in accordance with this Item and measured as provided under “Measurement” will be paid for at the unit price bid for the types of work shown below. No additional payment will be made for thickness or width exceeding that shown on the typical section or provided on the plans for cubic yard in the final position or square yard measurement.

Sprinkling and rolling, except proof rolling, will not be paid for directly but will be subsidiary to this Item unless otherwise shown on the plans. When proof rolling is shown on the plans or directed, it will be paid for in accordance with Item 216, “Proof Rolling.”

Where subgrade is constructed under this Contract, correction of soft spots in the subgrade will be at the Contractor’s expense. Where subgrade is not constructed under this project, correction of soft spots in the subgrade will be paid in accordance with pertinent Items or Article 4.2, “Changes in the Work.”

A. Flexible Base (Complete In Place). Payment will be made for the type and grade specified. For cubic yard measurement, “In Vehicle,” “In Stockpile,” or “In Final Position” will be specified. For square yard measurement, a depth will be specified. This price is full compensation for furnishing materials, temporary stockpiling, assistance provided in stockpile sampling and operations to level stockpiles for measurement, loading, hauling, delivery of materials, spreading, blading, mixing, shaping, placing, compacting, reworking, finishing, correcting locations where thickness is deficient, curing, furnishing scales and labor for weighing and measuring, and equipment, labor, tools, and incidentals.

B. Flexible Base (Roadway Delivery). Payment will be made for the type and grade specified. For cubic yard measurement, “In Vehicle” will be specified. The unit price bid will not include processing at the roadway. This price is full compensation for furnishing materials, temporary stockpiling, assistance provided in stockpile sampling and operations to level stockpiles for measurement, loading, hauling, delivery of materials, furnishing scales and labor for weighing and measuring, and equipment, labor, tools, and incidentals.

C. Flexible Base (Stockpile Delivery). Payment will be made for the type and grade specified. For cubic yard measurement, “In Vehicle” or “In Stockpile” will be specified. The unit price bid will not include processing at the roadway. This price is full compensation for furnishing and disposing of materials, preparing the stockpile area, temporary or permanent stockpiling, assistance provided in stockpile sampling and operations to level stockpiles for measurement, loading, hauling, delivery of materials to the stockpile, furnishing scales and labor for weighing and measuring, and equipment, labor, tools, and incidentals.

ITEM 292

ASPHALT TREATMENT (PLANT-MIXED)

292.1. Description. Construct a base or foundation course composed of a compacted mixture of aggregate and asphalt binder mixed hot in a mixing plant.

292.2. Materials. Furnish uncontaminated materials of uniform quality that meet the requirements of the plans and specifications. Notify the Engineer of the proposed material sources and of changes to material sources. When a source change occurs, the Engineer will verify that the specification requirements are met and may require a new laboratory mixture design. Use Tex-100-E for material definitions.

A. Aggregate. Furnish natural aggregates or crushed concrete unless otherwise shown on the plans. When shown on the plans, other recycled materials, including reclaimed asphalt concrete pavement (RAP), are allowed up to the maximum percentage shown on the plans. Stockpile aggregates for each source and type separately. Do not add material to an approved stockpile unless approved by the Engineer.

Furnish aggregates that conform to the requirements shown in Table 1 and specified in this Section unless otherwise shown on the plans. Each source must meet the requirements of Table 1. The Engineer may allow testing of the proposed combined aggregates, rather than each source, to meet Table 1 requirements.

Table 1
Aggregate Quality Requirements

Property	Test Method	Specification Requirement
Wet ball mill, % max	Tex-116-E	50
Max increase, % passing #40		20
Los Angeles abrasion[1], % max	Tex-410-A	50
Liquid limit, max	Tex-104-E	40
Plasticity index, max	Tex-106-E	10
Sand equivalent, % min	Tex-203-F	40
Decantation[2], % max	Tex-406-A	5.0
Crushed faces, % min	Tex-460-A	60

1. Use only when shown on the plans, instead of wet ball mill test.
2. Required only for RAP stockpiles and recycled aggregates when more than 30% RAP is allowed.

B. Recycled Materials. The use of recycled materials is allowed only when shown on the plans. Crushed concrete, RAP (except for Department furnished RAP), and other recycled materials must meet the requirements of this Article. Request approval to blend 2 or more sources of recycled materials.

1. Limits on Percentage. When RAP is allowed by the plans, use no more than 30% unless otherwise shown on the plans. The percentage limitations for other recycled materials will be as shown on the plans.

2. Recycled Material (Including Crushed Concrete) Requirements.

a. Contractor Furnished Recycled Materials. When the Contractor furnishes the recycled materials, including crushed concrete, the final product will be subject to the requirements of this Article and Table 2 for the grade specified. Certify compliance with DMS-11000, "Evaluating and Using Nonhazardous Recyclable Materials Guidelines," for Contractor-furnished recycled materials. In addition, recycled materials must be free from reinforcing steel and other objectionable material and have at most 1.5% deleterious material when tested in accordance with Tex-413-A. The unblended recycled materials (crushed concrete and RAP) must not exceed the decantation shown in Table 1. Test RAP without removing the asphalt. Do not use RAP that is contaminated by dirt or other objectionable material. Crushed

concrete must be managed in a way to provide for uniform quality. The Engineer may require separate dedicated stockpiles in order to verify compliance.

When more than 30% Contractor-owned recycled materials is allowed and used, the individual materials are subject to the requirements of Table 1.

b. Department Furnished Required Recycled Materials. When the Department furnishes and requires the use of recycled materials, unless otherwise shown on the plans:

- Department required recycled material will not be subject to the requirements in Table 1,
- Contractor furnished materials are subject to the requirements in Table 1 and this Item, and
- the final product, blended or unblended, will be subject to the requirements in Table 2.

Crush Department-furnished RAP so that 100% passes the 2 in. sieve. The Contractor is responsible for uniformly blending to meet the percentage required.

c. Department Furnished and Allowed Recycled Materials. When the Department furnishes and allows the use of recycled materials or allows the Contractor to furnish recycled materials, the final blended product is subject to the requirements of this Article, Table 2, and the plans.

3. Recycled Material Sources. Department-owned recycled material is available to the Contractor only when shown on the plans. The location, approximate asphalt content, and approximate gradation will be shown on the plans for Department-owned RAP sources in a stockpile condition prior to Contract Execution. Assume that required Department-owned RAP meets Table 1 requirements. Return unused Department-owned recycled materials to the Department stockpile location designated by the Engineer unless otherwise shown on the plans.

The use of Contractor-owned recycled materials is allowed when shown on the plans. Contractor-owned surplus recycled materials remain the property of the Contractor. Remove Contractor-owned recycled materials from the project and dispose of it in accordance with federal, state, and local regulations before project acceptance. Do not intermingle Contractor-owned recycled material with Department-owned recycled material unless approved by the Engineer.

C. Asphalt Material. Furnish the type and grade of asphalt binder specified on the plans. Provide asphalt binder that meets requirements of Item 300, "Asphalts, Oils and Emulsions." When more than 30% RAP is allowed and used, ensure that the new binder and recovered binder from the RAP, when blended proportionally, meet the PG binder designation shown on the plans.

D. Tack Coat. Unless otherwise shown on the plans or approved, furnish CSS-1H, SS-1H, or a PG binder with a minimum high temperature grade of PG 58 for tack coat binder in accordance with Item 300, "Asphalts, Oils, and Emulsions."

Do not dilute emulsified asphalts at the terminal, in the field, or at any other location before use. If required, verify that emulsified asphalt proposed for use meets the minimum residual asphalt percentage specified in Item 300, "Asphalts, Oils, and Emulsions."

The Engineer will obtain at least 1 sample of the tack coat binder per project and test to verify compliance with Item 300. The Engineer will obtain the sample from the asphalt distributor immediately before use.

E. Additives. When shown on the plans, use the type and rate of additive specified. Other additives that facilitate mixing or improve the quality of the mix may be allowed when approved.

If lime or a liquid antistripping agent is used, add in accordance with Item 301, "Asphalt Antistripping Agents." Do not add lime directly into the mixing drum of any plant where lime is removed through the exhaust stream unless the plant has a baghouse or dust collection system that reintroduces the fines back into the drum.

292.3. Equipment. Provide machinery, tools, and equipment in accordance with Item 320, "Equipment for Production, Hauling, and Placement of Hot-Mixed Asphalt Materials."

292.4. Construction. Produce, haul, place, and compact the specified mixture in accordance with the requirements of this Item.

A. Mixture Design. Using Tex-126-E and the materials proposed for the project, the Engineer will determine the target asphalt content required to produce a mixture meeting the requirements in Table 2 for the grade shown on the plans. The gradation of the combined aggregates will be determined in accordance with Tex-200-F, Part I. The Engineer may accept a design from the Contractor that is performed in accordance with Tex-126-E. Reimburse the Department for subsequent mixture designs or partial designs necessitated by changes in the material or requests by the Contractor.

Table 2
Mix Requirements

Master Gradation Bands Tex-200-F, Part I, % Passing by Weight				
Sieve Size	**Grade 1**	**Grade 2**	**Grade 3**	**Grade 4**
1-3/4"		100	100	As shown on the plans
1-1/2"	100	90–100		
1"	90–100			
3/8"	45–70			
#4	30–55	25–55		
#40	15–30	15–40	15–40	
Strength Requirements				
Slow strength, psi, min.[1]	50	40	30	30[2]

1. At optimum asphalt content.
2. Unless a higher minimum strength is shown on the plans.

The mixture must contain between 3.0% and 9.0% asphalt when designed in accordance with Tex-126-E. The Engineer will evaluate the mixture for moisture susceptibility in accordance with Tex-530-C unless otherwise shown on the plans. A maximum of 10% stripping is allowed unless otherwise shown on the plans. The test sample will be retained and used to establish a baseline for comparison to production results. The Engineer may waive this test if a similar design using the same materials has proven satisfactory.

Produce a trial batch using the proposed project materials and equipment in a large enough quantity to ensure that the mixture is representative of the mixture design. The Department will verify the strength requirement in Table 2 is met. The Engineer may waive trial mixtures if similar designs have proven satisfactory.

B. Production Operations. Produce a new trial batch when the plant or plant location is changed. Take corrective action and receive approval to proceed after any production suspension for non-compliance to the specification.

1. Storage and Heating of Materials. Do not heat the asphalt binder above the temperature specified in Item 300, “Asphalts, Oils and Emulsions,” or outside the manufacturer’s recommended values. On a daily basis, provide the Engineer with the records of asphalt binder and hot mix asphalt discharge temperatures in accordance with Item 320, “Equipment for Hot-Mix Asphalt Materials.” Unless otherwise approved, do not store hot mix for more than 12 hr. or for a time period less than 12 hr. that affects the quality of the mixture.

2. **Mixing and Discharge of Materials.** Notify the Engineer of the target discharge temperature and produce the mixture within 25ºF of the target. When ordinary compaction is used, the Engineer will select a target discharge temperature between 225°F and 350°F. Produce the mixture within 25°F of the target. Monitor the temperature of the material in the truck before shipping to ensure that it does not exceed 350°F. The Department will not pay for or allow placement of any mixture produced at more than 350°F.

   Control the mixing time and temperature so that substantially all moisture is removed from the mixture before discharging from the plant. The Engineer may perform Tex-212-F, Part II, to verify that the mixture contains no more than 0.2% moisture by weight. The sample will be taken immediately after the mixture is discharged into the truck and tested promptly.

C. Hauling Operations. Before use, clean all truck beds to ensure that the mixture will not become contaminated. When a release agent is necessary, use a release agent on the approved list maintained by the Construction Division to coat the truck bed.

D. Placement Operations. Prepare the surface by removing objectionable material such as moisture, dirt, sand, leaves and other loose impediments before placing the mixture. Coordinate mixture delivery and paver speed to ensure a continuous placement operation. Suspend placement operations when, in the opinion of the Engineer, a continuous paving operation is not maintained. Place the mixture to produce a smooth, finished surface with a uniform appearance and texture that meet typical section requirements. Offset longitudinal joints of successive courses of stabilized base by at least 6 in. Place the mix adjacent to gutters and structures so that the pavement will drain properly.

1. **Weather Conditions.** Tack coat and mixture may be placed only when the roadway surface temperature is 60°F or higher unless otherwise approved. Measure the roadway surface temperature with a handheld infrared thermometer. Place tack coat or mixtures only when the Engineer determines that general weather conditions and moisture conditions of the roadway surface are suitable. The Engineer may waive placement temperature requirements.

2. **Tack Coat.** Clean the surface before placing the tack coat. Unless otherwise approved, apply tack coat uniformly at a rate between 0.04 and 0.10 gal. of residual asphalt per square yard of surface area. Apply a thin uniform tack coat to all contact surfaces of curbs, structures, and joints. Prevent splattering of tack coat when placed adjacent to curbs, gutters, and structures. Roll the tack coat

with a pneumatic tire roller unless otherwise directed. The Engineer may use Tex-243-F to verify that the tack coat has adequate adhesive properties. The Engineer may suspend paving operations until there is adequate adhesion. The Engineer may waive the requirement to place tack coat.

3. **Lay-Down Operations.** Dump and spread the asphalt mixture on the approved prepared surface with a spreading and finishing machine. Place the material without tearing, shoving, gouging, or segregating the mixture.

   Do not jar or bounce the finishing machine when loading it. Obtain the required lines and grades without hand finishing. The Engineer may authorize hand finishing when the mixture is:
   - placed in a narrow strip along the edge of existing pavement,
   - used to level small areas, or
   - placed in small irregular areas where the use of a finishing machine is not practical.

   Leveling courses and other areas may be spread with a motor grader when shown on the plans or approved.

   When hot mix is placed in windrows, operate windrow pick-up equipment so that substantially all the mixture deposited on the roadbed is picked up and loaded into the spreading and finishing machine.

   Adjust the hopper flow gates of the spreading and finishing machine to provide an adequate and consistent flow of material. Operate the augers at least 85% of the time. Keep the augers one-half to three-quarters full of mixture. Maintain an adequate flow of material to the center of the paver for the full width of the mat.

   Immediately take appropriate corrective action if surface irregularities including but not limited to segregation, rutting, raveling, flushing, fat spots, mat slippage, color, texture, roller marks, tears, gouges, or streaks are detected. Continue placement for no more than 1 day of production while appropriate action is taken. If no appropriate corrective action is taken or if the problem still exists after 1 day, suspend paving until the Engineer approves further production.

E. Compaction. Uniformly compact the pavement to the density requirements of this Item. Use the procedure described in Tex-207-F, Part IV, to establish the rolling pattern. Do not use pneumatic tire rollers if excessive pickup of fines by roller tires occurs.

When using three-wheel, tandem, or vibratory rollers, first roll the joint with the adjacent pavement. Continue rolling longitudinally at the

sides, proceeding toward the center of the pavement, and overlap successive trips by at least one foot unless otherwise directed. Make alternate trips of the roller slightly different in length. Begin rolling of super-elevated curves at the low side and proceed toward the high side, unless otherwise directed.

When operating vibratory rollers:

- do not operate in vibrating mode when stationary;
- do not operate in vibrating mode when changing directions;
- do not operate in vibrating mode on mats with a plan depth of less than 1-1/2 in.;
- do not allow the roller to stand on pavement that has not been fully compacted;
- do not operate when in contact with the compacted, finished pavement structure layer;
- in case of over-vibration resulting in disruption of the compacted material, rework and recompact or replace the damaged material at the Contractor's expense;
- roll at a speed producing at least 10 blows per foot unless otherwise directed;
- keep the drums moist with water without using excess water; and
- do not drop diesel, gasoline, oil, grease, or other foreign matter on the pavement.

Where specific air void requirements are waived, furnish and operate compaction equipment as approved. Use lightly oiled tamps to thoroughly compact the edges of the pavement along curbs, headers, and similar structures and in locations that will not permit thorough compaction with rollers. The Engineer may require rolling with a trench roller on widened areas, in trenches, and in other limited areas.

In-place compaction control is required for all mixtures. Complete all rolling for compaction before the mixture temperature drops below 175°F. Unless otherwise shown on the plans, use density control.

1. **Density Control.** Determine the number and type of rollers needed to obtain the required density. Operate the rollers in accordance with the requirements of this specification and as approved.

   Place and compact material to the minimum density required as determined by Tex-126-E or as shown on the plans. The Engineer will determine laboratory-molded density in accordance with Tex-126-E from material sampled at the plant. Actual in-place density will be determined in accordance with Tex-126-E unless otherwise directed. Unless otherwise shown on the plans, obtain required roadway specimens as directed. The Engineer will measure air voids in accordance with Tex-207-F. When a

satisfactory correlation to results obtained in accordance with Tex-126-E is shown, other methods of determining in-place compaction may be used.

If in-place density is more than 1.0 percentage point below minimum density, cease production immediately. If in-place density is between 0.1 and 1.0 percentage points below minimum density, investigate the causes and make the necessary corrections. If minimum density is not obtained within one full day of operation, cease production.

Resume production after placing a test section of one lane width and a maximum 0.2 miles long that demonstrates that minimum density can be obtained. Repeat this procedure until producing a test section that meets minimum density requirements. Place no more than 2 test sections per day. Increasing the asphalt content of the mixture to increase in-place density is allowed by approval only.

2. **Ordinary Compaction** When ordinary compaction is required by the plans, furnish one three-wheel roller, one pneumatic tire roller, and one tandem roller, as directed, for each compaction operation. The Engineer may waive the use of the tandem roller when the surface is adequately smooth and further steel wheel rolling is shown to be ineffective. The Engineer may allow a vibratory roller to be substituted for the three-wheel roller, the tandem roller, or both. Use at least one pneumatic tire roller. Pneumatic tire rollers will provide a minimum of 80 psi ground contact pressure when used for compaction and a minimum of 55 psi ground contact pressure when used for kneading and sealing the surface. Provide additional rollers as directed.

   Establish rolling patterns in accordance with Tex-207-F, Part IV, unless otherwise directed. Follow the selected rolling pattern unless changes in mixture or placement conditions that affect compaction occur. When changes occur, establish a new rolling pattern.

F. Sampling and Testing.

1. **Production Sampling.**

   a. **Mixture Sampling.** The Engineer will obtain mixture samples in accordance with Tex-222-F.

   b. **Asphalt Binder Sampling.** The Engineer will obtain at least one 1-quart sample of the asphalt binder used during the project, labeled with date and time, sampled from a port located immediately upstream from the mixing drum or pug

mill. The sample will be taken in accordance with Tex-500-C, Part II.

2. **Production Testing.** The Engineer will perform production tests.

   a. **Operational Tolerances.** The Engineer will determine compliance with operational tolerances. The gradation of the aggregate must be within the master grading limits for the specified grade except that a tolerance of 2 percentage points is allowed on the sieve size for each mixture grade that shows 100% passing in Table 2.

      Ensure that the asphalt content does not vary by more than 0.5 percentage points from the design target.

   b. **Individual Loads of Asphalt-Stabilized Base.** The Engineer retains the right to reject individual truckloads of asphalt-stabilized base when it is evident that the material quality is unacceptable. When a load is rejected for reasons other than temperature, the Contractor may request that the rejected load be tested. Make this request within 4 hours of rejection. If Department test results are within the operational tolerances listed in Section 292.4.F.2.a, "Operational Tolerances," payment will be made for the load. If Department test results are not within operational tolerances, no payment will be made for the load.

3. **Placement Sampling and Testing.** Obtain two 6-in-diameter cores side by side at locations selected by the Engineer. Provide the Engineer an opportunity to witness the coring operation and measure the core thickness. Mark the cores for identification. Immediately after obtaining the cores, dry the core holes and tack the sides and bottom. Fill the hole with the same type of mixture and properly compact the mixture. Other methods of repairing the core holes are allowed when approved.

   Trim the cores, if necessary, and deliver them to the Engineer within 1 working day following placement operations unless otherwise approved.

   a. **In-Place Air Voids.** The Engineer will measure in-place air voids in accordance with Tex-207-F and Tex-227-F to verify that in-place density requirements of Section 292.4.E.1, "Density Control," are met.

   b. **Irregularities.** Remove and replace, at the expense of the Contractor and to the satisfaction of the Engineer, any mixture that does not bond to the existing pavement or has other surface irregularities identified by the Engineer.

c. **Production Binder Properties.** The Engineer may take cores or other production samples at random from the project to determine recovered asphalt properties. Asphalt binders with an aging ratio greater than 3.5 do not meet requirements for recovered asphalt properties and may be deemed defective when tested and evaluated by the Construction Division. The aging ratio, as determined in accordance with AASHTO T 315, is the DSR value of the extracted binder divided by the DSR value of the original unaged binder. The binder from RAP will be included proportionally as part of the original unaged binder. The Engineer may require the defective material be removed and replaced at the Contractor's expense. The asphalt binder will be recovered for testing from cores in accordance with Tex-211-F.

G. Surface Finish. Use Surface Test Type A in accordance with Item 585, "Ride Quality for Pavement Surfaces," unless otherwise shown on the plans.

H. Opening to Traffic. Open the completed course to traffic when permitted or directed. If the surface ravels, flushes, ruts, or deteriorates in any manner before final acceptance, correct it at the Contractor's expense and to the satisfaction of the Engineer.

292.5. Measurement. This Item will be measured by the ton of composite hot mix. The composite hot mix is defined as the asphalt, aggregate, RAP, and additives noted on the plans and approved by the Engineer. Measurement will be made using scales meeting the requirements of Item 520, "Weighing and Measuring Equipment."

292.6. Payment. The work performed and materials furnished in accordance with this Item and measured as provided under "Measurement" will be paid for at the unit price bid for "Asphalt Stabilized Base" of the grade and binder type specified. This price is full compensation for furnishing and disposing of materials, producing trial batches, loading, hauling, placing, compacting, sampling, testing, replacing defective material, furnishing scales and labor for weighing and measuring, and equipment, labor, tools, and incidentals. State-owned RAP from sources designated on the plans shown to be available will be provided to the Contractor at no cost.

ITEM 300

ASPHALTS, OILS, AND EMULSIONS

300.1. Description. Provide asphalt cements, cutback and emulsified asphalts, performance-graded asphalt binders, and other miscellaneous asphalt materials as specified on the plans.

300.2. Materials. Provide asphalt materials that meet the stated requirements when tested in accordance with the referenced Department, AASHTO, and ASTM test methods. Refer to the Material Inspection Guide (maintained by the Construction Division), Section 11. "Asphalt Inspection, Quality Control and Quality Assurance," for sampling and testing requirements.

Acronyms used in this Item are defined in Table 1.

Table 1
Acronyms

Acronym	Definition
Test Procedure Designations	
Tex	Department
T or R	AASHTO
D	ASTM
Polymer Modifier Designations	
P	polymer-modified
SBR or L	styrene-butadiene rubber (latex)
SBS	styrene-butadiene-styrene block co-polymer
TR	tire rubber (from ambient temperature grinding of truck and passenger tires)
AC	asphalt cement
AE	asphalt emulsion
AE-P	asphalt emulsion prime
A-R	asphalt-rubber
C	cationic
EAP&T	emulsified asphalt prime and tack
H-suffix	harder residue (lower penetration)
HF	high float
MC	medium-curing

Table 1 (continued)
Acronyms

Acronym	Definition
MS	medium-setting
PCE	prime, cure, and erosion control
PG	performance grade
RC	rapid-curing
RS	rapid-setting
S-suffix	stockpile usage
SCM	special cutback material
SS	slow-setting

A. Asphalt Cement. Asphalt cement must be homogeneous, water-free, and nonfoaming when heated to 347°F, and must meet Table 2 requirements.

Table 2
Asphalt Cement

Property	Test Procedure	Viscosity Grade									
		AC-0.6		AC-1.5		AC-3		AC-5		AC-10	
		Min	Max	Min	Max	Min	Max	Min	Max	Min	Max
Viscosity	T 202										
140°F, poise		40	80	100	200	250	350	400	600	800	1,200
275°F, poise		0.4	–	0.7	–	1.1	–	1.4	–	1.9	–
Penetration, 77°F, 100g, 5 sec.	T 49	350	–	250	–	210	–	135	–	85	–
Flash point, C.O.C., °F	T 48	425	–	425	–	425	–	425	–	450	–
Solubility in trichloroethylene, %	T 44	99.0	–	99.0	–	99.0	–	99.0	–	99.0	–
Spot test	Tex-509-C	Neg.		Neg.		Neg.		Neg.		Neg.	
Tests on residue from Thin-Film Oven Test:	T 179										
Viscosity, 140°F, poise	T 202	–	180	–	450	–	900	–	1,500	–	3,000
Ductility[1], 77°F 5 cm/min., cm	T 51	100	–	100	–	100	–	100	–	100	–

1. If AC-0.6 or AC-1.5 ductility at 77°F is less than 100 cm, material is acceptable if ductility at 60°F is more than 100 cm.

B. Polymer-Modified Asphalt Cement. Polymer-modified asphalt cement must be smooth and homogeneous, and comply with the requirements of Table 3. If requested, supply samples of the base asphalt cement and polymer additives.

Table 3
Polymer-Modified Asphalt Cement

Property	Test Procedure	Polymer-Modified Viscosity Grade							
		AC-5 w/2% SBR		AC-10 w/2% SBR		AC-15P		AC-20-5TR	
		Min	Max	Min	Max	Min	Max	Min	Max
Polymer		SBR		SBR		SBS		TR	
Polymer content, % (solids basis)	Tex-533-C	2.0	–	2.0	–	3.0	–	5.0	–
Dynamic shear, G*/sin δ, 64°C, 10 rad/s, kPa	T 315	–	–	–	–	–	–	1.0	–
Viscosity									
140°F, poise	T 202	700	–	1,300	–	1,500	–	2,000	–
275°F, poise	T 202	–	7.0	–	8.0	–	8.0	–	10.0
Penetration, 77°F, 100 g, 5 sec.	T 49	120	–	80	–	100	150	75	115
Ductility, 5cm/min., 39.2°F, cm	T 51	70	–	60	–	–	–	–	–
Elastic recovery, 50°F, %	Tex-539-C	–	–	–	–	55	–	55	–
Softening point, °F	T 53	–	–	–	–	–	–	120	–
Polymer separation, 48 hr.	Tex-540-C	None		None		None		None	
Flash point, C.O.C., °F	T 48	425	–	425	–	425	–	425	–
Tests on residue from Thin-Film Oven Test:	T 179								
Retained penetration ratio, 77°F	T 49	–	–	–	–	0.60	1.00	0.60	1.00
Tests on residue from RTFOT aging and pressure aging:	Tex-541-C and R 28								
Creep stiffness	T 313								
S, -18°C, MPa		–	–	–	–	–	–	–	300
m-value, -18°C		–	–	–	–	–	–	0.300	–

C. Cutback Asphalt. Cutback asphalt must meet the requirements of Tables 4, 5, and 6 for the specified type and grade. If requested, supply samples of the base asphalt cement and polymer additives.

Table 4
Rapid-Curing Cutback Asphalt

Property	Test Procedure	Type–Grade					
		RC-250		RC-800		RC-3000	
		Min	Max	Min	Max	Min	Max
Kinematic viscosity, 140°F, cSt	T 201	250	400	800	1,600	3,000	6,000
Water, %	T 55	–	0.2	–	0.2	–	0.2
Flash point, T.O.C., °F	T 79	80	–	80	–	80	–
Distillation test:	T 78						
Distillate, percentage by volume of total distillate to 680°F							
to 437°F		40	75	35	70	20	55
to 500°F		65	90	55	85	45	75
to 600°F		85	–	80	–	70	–
Residue from distillation, volume %		70	–	75	–	82	–
Tests on distillation residue:							
Penetration, 100 g, 5 sec., 77°F	T 49	80	120	80	120	80	120
Ductility, 5 cm/min., 77°F, cm	T 51	100	–	100	–	100	–
Solubility in trichloroethylene, %	T 44	99.0	–	99.0	–	99.0	–
Spot test	Tex-509-C	Neg.		Neg.		Neg.	

Table 5
Medium-Curing Cutback Asphalt

Property	Test Procedure	Type–Grade							
		MC-30		MC-250		MC-800		MC-3000	
		Min	Max	Min	Max	Min	Max	Min	Max
Kinematic viscosity, 140°F, cSt	T 201	30	60	250	500	800	1,600	3,000	6,000
Water, %	T 55	–	0.2	–	0.2	–	0.2	–	0.2
Flash point, T.O.C., °F	T 79	100	–	150	–	150	–	150	–
Distillation test:	T 78								
Distillate, percentage by volume of total distillate to 680°F									
to 437°F		–	25	–	10	–	–	–	–
to 500°F		40	70	15	55	–	35	–	15
to 600°F		75	93	60	87	45	80	15	75
Residue from distillation, volume %		50	–	67	–	75	–	80	–
Tests on distillation residue:									
Penetration, 100 g, 5 sec., 77°F	T 49	120	250	120	250	120	250	120	250
Ductility, 5 cm/min., 77°F, cm[1]	T 51	100	–	100	–	100	–	100	–
Solubility in trichloroethylene, %	T 44	99.0	–	99.0	–	99.0	–	99.0	–
Spot test	Tex-509-C	Neg.		Neg.		Neg.		Neg.	

1. If the penetration of residue is more than 200 and the ductility at 77°F is less than 100 cm, the material is acceptable if its ductility at 60°F is more than 100 cm.

Table 6
Special-Use Cutback Asphalt

Property	Test Procedure	Type–Grade					
		MC-2400L		SCM I		SCM II	
		Min	Max	Min	Max	Min	Max
Kinematic viscosity, 140°F, cSt	T 201	2,400	4,800	500	1,000	1,000	2,000
Water, %	T 55	–	0.2	–	0.2	–	0.2
Flash point, T.O.C., °F	T 79	150	–	175	–	175	–
Distillation test:	T 78						
Distillate, percentage by volume of total distillate to 680°F							
to 437°F		–	–	–	–	–	–
to 500°F		–	35	–	0.5	–	0.5
to 600°F		35	80	20	60	15	50
Residue from distillation, volume %		78	–	76	–	82	–
Tests on distillation residue:							
Polymer		SBR		–		–	
Polymer content, % (solids basis)	Tex-533-C	2.0	–	–	–	–	–
Penetration, 100 g, 5 sec., 77°F	T 49	150	300	180	–	180	–
Ductility, 5 cm/min., 39.2°F, cm	T 51	50	–	–	–	–	–
Solubility in trichloroethylene, %	T 44	99.0	–	99.0	–	99.0	–

D. Emulsified Asphalt. Emulsified asphalt must be homogeneous, not separate after thorough mixing, and meet the requirements for the specified type and grade in Tables 7, 8, 9, and 10.

Table 7
Emulsified Asphalt

Property	Test Procedure	Type–Grade									
		Rapid-Setting		Medium-Setting				Slow-Setting			
		HFRS-2		MS-2		AES-300		SS-1		SS-1H	
		Min	Max	Min	Max	Min	Max	Min	Max	Min	Max
Viscosity, Saybolt Furol	T 72										
77°F, sec.		–	–	–	–	75	400	20	100	20	100
122°F, sec.		150	400	100	300	–	–	–	–	–	–
Sieve test, %	T 59	–	0.1	–	0.1	–	0.1	–	0.1	–	0.1
Miscibility	T 59	–		–		–		Pass		Pass	
Cement mixing, %	T 59	–	–	–	–	–	–	–	2.0	–	2.0
Coating ability and water resistance:	T 59										
dry aggregate/after spray		–		–		Good/Fair		–		–	
wet aggregate/after spray		–		–		Fair/Fair		–		–	
Demulsibility, 35 ml of 0.02 N $CaCl_2$, %	T 59	50	–	–	30	–	–	–	–	–	–
Storage stability, 1 day, %	T 59	–	1	–	1	–	1	–	1	–	1
Freezing test, 3 cycles[1]	T 59	–		Pass		–		Pass		Pass	
Distillation test:	T 59										
Residue by distillation, % by wt.		65	–	65	–	65	–	60	–	60	–
Oil distillate, % by volume of emulsion		–	0.5	–	0.5	–	5	–	0.5	–	0.5
Tests on residue from distillation:											
Penetration, 77°F, 100 g, 5 sec.	T 49	100	140	120	160	300	–	120	160	70	100
Solubility in trichloroethylene, %	T 44	97.5	–	97.5		97.5	–	97.5	–	97.5	–
Ductility, 77°F, 5 cm/min., cm	T 51	100	–	100		–	–	100	–	80	–
Float test, 140°F, sec.	T 50	1,200	–	–		1,200	–	–	–	–	–

1. Applies only when the Engineer designates material for winter use.

Table 8
Cationic Emulsified Asphalt

Property	Test Procedure	Type–Grade											
		Rapid-Setting				Medium-Setting				Slow-Setting			
		CRS-2		CRS-2H		CMS-2		CMS-2S		CSS-1		CSS-1H	
		Min	Max	Min	Max	Min	Max	Min	Max	Min	Max	Min	Max
Viscosity, Saybolt Furol	T 72												
77°F, sec.		–	–	–	–	–	–	–	–	20	100	20	100
122°F, sec.		150	400	150	400	100	300	100	300	–	–	–	–
Sieve test, %	T 59	–	0.1	–	0.1	–	0.1	–	0.1	–	0.1	–	0.1
Cement mixing, %	T 59	–	–	–	–	–	–	–	–	–	2.0	–	2.0
Coating ability and water resistance:	T 59												
dry aggregate/after spray		–		–		Good/Fair		Good/Fair		–		–	
wet aggregate/after spray		–		–		Fair/Fair		Fair/Fair		–		–	
Demulsibility, 35 ml of 0.8% sodium dioctyl sulfosuccinate, %	T 59	70	–	70	–	–	–	–	–	–	–	–	–
Storage stability, 1 day, %	T 59	–	1	–	1	–	1	–	1	–	1	–	1
Particle charge	T 59	Positive		Positive		Positive		Positive		Positive		Positive	
Distillation test:	T 59												
Residue by distillation, % by wt.		65	–	65	–	65	–	65	–	60	–	60	–
Oil distillate, % by volume of emulsion		–	0.5	–	0.5	–	7	–	5	–	0.5	–	0.5
Tests on residue from distillation:													
Penetration, 77°F, 100 g, 5 sec.	T 49	120	160	70	110	120	200	300	–	120	160	70	110
Solubility in trichloroethylene, %	T 44	97.5	–	97.5	–	97.5	–	97.5	–	97.5	–	97.5	–
Ductility, 77°F, 5 cm/min., cm	T 51	100	–	80	–	100	–	–	–	100	–	80	–

Table 9
Polymer-Modified Emulsified Asphalt

Property	Test Procedure	Type–Grade											
		Rapid-Setting				Medium-Setting				Slow-Setting			
		RS-1P		HFRS-2P		AES-150P		AES-300P		AES-300S		SS-1P	
		Min	Max	Min	Max	Min	Max	Min	Max	Min	Max	Min	Max
Viscosity, Saybolt Furol	T 72												
77°F, sec.		–	–	–	–	75	400	75	400	75	400	30	100
122°F, sec.		50	200	150	400	–	–	–	–	–	–	–	–
Sieve test, %	T 59	–	0.1	–	0.1	–	0.1	–	0.1	–	0.1	–	0.1
Miscibility	T 59	–		–		–		–		–		Pass	
Coating ability and water resistance:	T 59												
dry aggregate/after spray		–		–		Good/Fair		Good/Fair		Good/Fair		–	
wet aggregate/after spray		–		–		Fair/Fair		Fair/Fair		Fair/Fair		–	
Demulsibility, 35 ml of 0.02 N $CaCl_2$, %	T 59	60	–	50	–	–	–	–	–	–	–	–	–
Storage stability, 1 day, %	T 59	–	1	–	1	–	1	–	1	–	1	–	1
Breaking index, g	Tex-542-C	–	80	–	–	–	–	–	–	–	–	–	–
Distillation test:[1]	T 59												
Residue by distillation, % by wt.		65	–	65	–	65	–	65	–	65	–	60	–
Oil distillate, % by volume of emulsion		–	3	–	0.5	–	3	–	5	–	7	–	0.5
Tests on residue from distillation:													
Polymer content, wt. % (solids basis)	Tex-533-C	–	–	3.0	–	–	–	–	–	–	–	3.0	–
Penetration, 77°F, 100 g, 5 sec.	T 49	225	300	90	140	150	300	300	–	300	–	100	140
Solubility in trichloroethylene, %	T 44	97.0	–	97.0	–	97.0	–	97.0	–	97.0	–	97.0	–
Viscosity, 140°F, poise	T 202	–	–	1,500	–	–	–	–	–	–	–	1,300	–
Float test, 140°F, sec.	T 50	–	–	1,200	–	1,200	–	1,200	–	1,200	–	–	–
Ductility[2], 39.2°F, 5 cm/min., cm	T 51	–	–	50	–	–	–	–	–	–	–	50	–
Elastic recovery[2], 50°F, %	Tex-539-C	55	–	55	–	–	–	–	–	–	–	–	–
Tests on RTFO curing of distillation residue	Tex-541-C												
Elastic recovery, 50°F, %	Tex-539-C	–	–	–	–	50	–	50	–	30	–	–	–

1. Exception to T 59: Bring the temperature on the lower thermometer slowly to 350°F ±10°F. Maintain at this temperature for 20 min. Complete total distillation in 60 ±5 min. from the first application of heat.
2. HFRS-2P must meet one of either the ductility or elastic recovery requirements.

Table 10
Polymer-Modified Cationic Emulsified Asphalt

Property	Test Procedure	Type-Grade					
		Rapid-Setting				Slow-Setting	
		CRS-1P		CRS-2P		CSS-1P	
		Min	Max	Min	Max	Min	Max
Viscosity, Saybolt Furol	T 72						
77°F, sec.		–	–	–	–	20	100
122°F, sec.		50	150	150	400	–	–
Sieve test, %	T 59	–	0.1	–	0.1	–	0.1
Demulsibility, 35 ml of 0.8% sodium dioctyl sulfosuccinate, %	T 59	60	–	70	–	–	–
Storage stability, 1 day, %	T 59	–	1	–	1	–	1
Breaking index, g	Tex-542-C	–	80	–	–	–	–
Particle charge	T 59	Positive		Positive		Positive	
Distillation test:[1]	T 59						
Residue by distillation, % by weight		65	–	65	–	62	–
Oil distillate, % by volume of emulsion		–	3	–	0.5	–	0.5
Tests on residue from distillation:							
Polymer content, wt. % (solids basis)	Tex-533-C	–	–	3.0	–	3.0	–
Penetration, 77°F, 100 g, 5 sec.	T 49	225	300	90	150	55	90
Viscosity, 140°F, poise	T 202	–	–	1,300	–	–	–
Solubility in trichloroethylene, %	T 44	97.0	–	97.0	–	97.0	–
Softening point, °F	T 53	–	–	–	–	135	–
Ductility, 77°F, 5 cm/min., cm	T 51	–	–	–	–	70	–
Ductility[2], 39.2°F, 5 cm/min., cm	T 51	–	–	50	–	–	–
Elastic recovery[2], 50°F, %	Tex-539-C	45	–	55	–	–	–

1. Exception to T 59: Bring the temperature on the lower thermometer slowly to 350°F ±0°F. Maintain at this temperature for 20 min. Complete total distillation in 60 ±5 min. from the first application of heat.
2. CRS-2P must meet one of either the ductility or elastic recovery requirements.

E. Specialty Emulsions. Specialty emulsions may be either asphalt-based or resin-based and must meet the requirements of Table 11.

Table 11
Specialty Emulsions

Property	Test Procedure	Type–Grade					
		Medium-Setting				Slow-Setting	
		AE–P		EAP&T		PCE[1]	
		Min	Max	Min	Max	Min	Max
Viscosity, Saybolt Furol	T 72						
77°F, sec.		–	–	–	–	10	100
122°F, sec.		15	150	–	–	–	–
Sieve test, %	T 59	–	0.1	–	0.1	–	0.1
Miscibility[2]	T 59	–		Pass		Pass	
Demulsibility, 35 ml of 0.10 N $CaCl_2$, %	T 59	–	70	–	–	–	–
Storage stability, 1 day, %	T 59	–	1	–	1	–	–
Particle size[5], % by volume < 2.5 µm	Tex-238-F[3]	–	–	90	–	90	–
Asphalt emulsion distillation to 500°F followed by Cutback asphalt distillation of residue to 680°F:	T 59 & T 78						
Residue after both distillations, % by wt.		40	–	–	–	–	–
Total oil distillate from both distillations, % by volume of emulsion		25	40	–	–	–	–
Residue by distillation, % by wt.	T 59	–	–	60	–	–	–
Residue by evaporation[4], % by wt.	T 59	–	–	–	–	60	–
Tests on residue after all distillation(s):							
Viscosity, 140°F, poise	T 202	–	–	800	–	–	–
Kinematic viscosity[5], 140°F, cSt	T 201	–	–	–	–	100	350
Flash point C.O.C., °F	T 48	–	–	–	–	400	–
Solubility in trichloroethylene, %	T 44	97.5	–	–	–	–	–
Float test, 122°F, sec.	T 50	50	200	–	–	–	–

1. Supply with each shipment of PCE:
a) a copy of a lab report from an approved analytical lab, signed by a lab official, indicating the PCE formulation does not meet any characteristics of a Resource Conservation Recovery Act (RCRA) hazardous waste;
b) a certification from the producer that the formulation supplied does not differ from the one tested and that no listed RCRA hazardous wastes or PCBs have been mixed with the product; and
c) a Material Safety Data Sheet.
2. Exception to T 59: In dilution, use 350 ml of distilled or deionized water and a 1,000-ml beaker.
3. Use Tex-238-F, beginning at "Particle Size Analysis by Laser Diffraction," with distilled or deionized water as a medium and no dispersant, or use another approved method.
4. Exception to T 59: Leave sample in the oven until foaming ceases, then cool and weigh.
5. PCE must meet either the kinematic viscosity requirement or the particle size requirement.

F. Recycling Agent. Recycling agent and emulsified recycling agent must meet the requirements in Table 12. Additionally, recycling agent and residue from emulsified recycling agent, when added in the specified proportions to the recycled asphalt, must meet the properties specified on the plans.

Table 12
Recycling Agent and Emulsified Recycling Agent

Property	Test Procedure	Recycling Agent		Emulsified Recycling Agent	
		Min	Max	Min	Max
Viscosity, Saybolt Furol, 77°F, sec.	T 72	–	–	15	100
Sieve test, %	T 59	–	–	–	0.1
Miscibility[1]	T 59	–		No coagulation	
Residue by evaporation[2], % by wt.	T 59	–	–	60	–
Tests on recycling agent or residue from evaporation:					
Flash point, C.O.C., °F	T 48	400	–	400	–
Kinematic viscosity,	T 201				
140°F, cSt		75	200	75	200
275°F, cSt		–	10.0	–	10.0

1. Exception to T 59: Use 0.02 N $CaCl_2$ solution in place of water.
2. Exception to T 59: Maintain sample at 300°F until foaming ceases, then cool and weigh.

G. Crumb Rubber Modifier. Crumb rubber modifier (CRM) consists of automobile and truck tires processed by ambient temperature grinding.

CRM must be:

- free from contaminants including fabric, metal, and mineral and other nonrubber substances;
- free-flowing; and
- nonfoaming when added to hot asphalt binder.

When tested in accordance with Tex-200-F, Part I, using a 50-g sample, the rubber gradation must meet the requirements of the grades in Table 13.

Table 13
CRM Gradations

Sieve Size (% Passing)	Grade A		Grade B		Grade C		Grade D	Grade E
	Min	Max	Min	Max	Min	Max		
#8	100	–	–	–	–	–	As shown on the plans	As approved
#10	95	100	100	–	–	–		
#16	–	–	70	100	100	–		
#30	–	–	25	60	90	100		
#40	–	–	–	–	45	100		
#50	0	10	–	–	–	–		
#200	–	–	0	5	–	–		

H. Crack Sealer. Polymer modified asphalt-emulsion crack sealer must meet the requirements of Table 14. Rubber-asphalt crack sealer must meet the requirements of Table 15.

Table 14
Polymer-Modified Asphalt Emulsion Crack Sealer

Property	Test Procedure	Min	Max
Rotational viscosity, 77°F, cP	D 2196, Method A	10,000	25,000
Sieve test, %	T 59	–	0.1
Storage stability, 1 day, %	T 59	–	1
Evaporation	Tex-543-C		
Residue by evaporation, % by wt.		65	–
Tests on residue from evaporation:			
Penetration, 77°F, 100 g, 5 sec.	T 49	35	75
Softening point, °F	T 53	140	–
Ductility, 39.2°F, 5 cm/min., cm	T 51	100	–

Table 15
Rubber-Asphalt Crack Sealer

Property	Test Procedure	Class A Min	Class A Max	Class B Min	Class B Max
CRM content, Grade A or B, % by wt.	Tex-544-C	22	26	–	–
CRM content, Grade B, % by wt.	Tex-544-C	–	–	13	17
Virgin rubber content[1], % by wt.		–	–	2	–
Flash point[2], COC, °F	T 48	400	–	400	–
Penetration[3], 77°F, 150 g, 5 sec.	T 49	30	50	30	50
Penetration[3], 32°F, 200 g, 60 sec.	T 49	12	–	12	–
Softening point, °F	T 53	–	–	170	–
Bond[4]	D5329	–		Pass	

1. Provide certification that the min. % virgin rubber was added.
2. Before passing the test flame over the cup, agitate the sealing compound with a 3/8- to 1/2-in. (9.5- to 12.7-mm) wide, square-end metal spatula in a manner so as to bring the material on the bottom of the cup to the surface, i.e., turn the material over. Start at one side of the thermometer, move around to the other, and then return to the starting point using 8 to 10 rapid circular strokes. Accomplish agitation in 3 to 4 sec. Pass the test flame over the cup immediately after stirring is completed.
3. Exception to T 49: Substitute the cone specified in ASTM D 217 for the penetration needle.
4. No crack in the crack sealing materials or break in the bond between the sealer and the mortar blocks over 1/4 in. deep for any specimen after completion of the test.

I. Asphalt-Rubber Binders. Asphalt-rubber (A-R) binders are mixtures of asphalt binder and CRM, which have been reacted at elevated temperatures. The A-R binders meet D 6114 and contain a minimum of 15% CRM by weight. Types I or II, containing CRM Grade C, are used

for hot mixed aggregate mixtures. Types II or III, containing CRM Grade B, are used for surface treatment binder. Table 16 describes required binder properties.

Table 16
A-R Binders

Property	Test Procedure	Binder Type					
		Type I		Type II		Type III	
		Min	Max	Min	Max	Min	Max
Apparent viscosity, 347°F, cP	D 2196, Method A	1,500	5,000	1,500	5,000	1,500	5,000
Penetration, 77°F, 100 g, 5 sec.	T 49	25	75	25	75	50	100
Penetration, 39.2°F, 200 g, 60 sec.	T 49	10	–	15	–	25	–
Softening point, °F	T 53	135	–	130	–	125	–
Resilience, 77°F, %	D 5329	25	–	20	–	10	–
Flash point, C.O.C., °F	T 48	450	–	450	–	450	–
Tests on residue from Thin-Film Oven Test:	T 179						
Retained penetration ratio, 39.2°F, 200 g, 60 sec., % of original	T 49	75	–	75	–	75	–

J. Performance-Graded Binders. PG binders must be smooth and homogeneous, show no separation when tested in accordance with Tex-540-C, and meet Table 17 requirements.

Separation testing is not required if:

- a modifier is introduced separately at the mix plant either by injection in the asphalt line or mixer,
- the binder is blended on site in continuously agitated tanks, or
- binder acceptance is based on field samples taken from an in-line sampling port at the hot mix plant after the addition of modifiers.

Table 17
Performance-Graded Binders

Property and Test Method	Performance Grade																	
	PG 58			PG 64				PG 70				PG 76				PG 82		
	-22	-28	-34	-16	-22	-28	-34	-16	-22	-28	-34	-16	-22	-28	-34	-16	-22	-28
Average 7-day max pavement design temperature, °C[1]	< 58			< 64				< 70				< 76				< 82		
Min pavement design temperature, °C[1]	>-22	>-28	>-34	>-16	>-22	>-28	>-34	>-16	>-22	>-28	>-34	>-16	>-22	>-28	>-34	>-16	>-22	>-28
ORIGINAL BINDER																		
Flash point, T 48, Min, °C	230																	
Viscosity, T 316:[2, 3] Max, 3.0 Pa·s, test temperature, °C	135																	
Dynamic shear, T 315:[4] G*/sin(δ), Min, 1.00 kPa Test temperature @ 10 rad/sec., °C	58			64				70				76				82		
Elastic recovery, D 6084, 50°F, % Min	–	–	30	–	–	30	50	–	30	50	60	30	50	60	70	50	60	70
ROLLING THIN-FILM OVEN (Tex-541-C)																		
Mass loss, Tex-541-C, Max, %	1.0																	
Dynamic shear, T 315: G*/sin(δ), Min, 2.20 kPa Test temperature @ 10 rad/sec., °C	58			64				70				76				82		
PRESSURE AGING VESSEL (PAV) RESIDUE (R 28)																		
PAV aging temperature, °C	100																	
Dynamic shear, T 315: G*/sin(δ), Max, 5000 kPa Test temperature @ 10 rad/sec., °C	25	22	19	28	25	22	19	28	25	22	19	28	25	22	19	28	25	22

Table 17
Performance-Graded Binders

Property and Test Method	Performance Grade																	
	PG 58			PG 64				PG 70				PG 76				PG 82		
	-22	-28	-34	-16	-22	-28	-34	-16	-22	-28	-34	-16	-22	-28	-34	-16	-22	-28
Average 7-day max pavement design temperature, °C[1]	< 58			< 64				< 70				< 76				< 82		
Min pavement design temperature, °C[1]	>-22	>-28	>-34	>-16	>-22	>-28	>-34	>-16	>-22	>-28	>-34	>-16	>-22	>-28	>-34	>-16	>-22	>-28
Creep stiffness, T 313:[5, 6]	-	-	-	-6	-	-	-	-6	-	-	-	-6	-	-	-	-6	-	-
S, max, 300 MPa,	12	18	24		12	18	24		12	18	24		12	18	24		12	18
m-value, min, 0.300																		
Test temperature @ 60 sec., °C																		
Direct tension, T 314:[6]	-	-	-	-6	-	-	-	-6	-	-	-	-6	-	-	-	-6	-	-
Failure strain, min, 1.0%	12	18	24		12	18	24		12	18	24		12	18	24		12	18
Test temperature @ 1.0 mm/min., °C																		

1. Pavement temperatures are estimated from air temperatures using an algorithm contained in a Department-supplied computer program, may be provided by the Department, or by following the procedures outlined in AASHTO MP 2 and PP 28.
2. This requirement may be waived at the Department's discretion if the supplier warrants that the asphalt binder can be adequately pumped, mixed, and compacted at temperatures that meet all applicable safety, environmental, and constructability requirements. At test temperatures where the binder is a Newtonian fluid, any suitable standard means of viscosity measurement may be used, including capillary (T 201 or T 202) or rotational viscometry (T 316).
3. Viscosity at 135°C is an indicator of mixing and compaction temperatures that can be expected in the lab and field. High values may indicate high mixing and compaction temperatures. Additionally, significant variation can occur from batch to batch. Contractors should be aware that variation could significantly impact their mixing and compaction operations. Contractors are therefore responsible for addressing any constructability issues that may arise.
4. For quality control of unmodified asphalt binder production, measurement of the viscosity of the original asphalt binder may be substituted for dynamic shear measurements of $G^*/\sin(\delta)$ at test temperatures where the asphalt is a Newtonian fluid. Any suitable standard means of viscosity measurement may be used, including capillary (T 201 or T 202) or rotational viscometry (T 316).
5. Silicone beam molds, as described in AASHTO TP 1-93, are acceptable for use.
6. If creep stiffness is below 300 MPa, direct tension test is not required. If creep stiffness is between 300 and 600 MPa, the direct tension failure strain requirement can be used instead of the creep stiffness requirement. The *m*-value requirement must be satisfied in both cases.

300.3. Equipment. Provide all equipment necessary to transport, store, sample, heat, apply, and incorporate asphalts, oils, and emulsions.

300.4. Construction.

A. Typical Material Use. Table 18 shows typical materials used for specific applications. These are typical uses only. Circumstances may require use of other material.

Table 18
Typical Material Use

Material Application	Typically Used Materials
Hot-mixed, hot-laid asphalt mixtures	PG binders, A-R binders Types I and II
Surface treatment	AC-5, AC-10, AC-5 w/2% SBR, AC-10 w/2% SBR, AC-15P, AC-20-5TR, HFRS-2, MS-2, CRS-2, CRS-2H, HFRS-2P, CRS-2P, A-R binders Types II and III
Surface treatment (cool weather)	RS-1P, CRS-1P, RC-250, RC-800, RC-3000, MC-250, MC-800, MC-3000, MC-2400L
Precoating	AC-5, AC-10, PG 64-22, SS-1, SS-1H, CSS-1, CSS-1H
Tack coat	PG Binders, SS-1H, CSS-1H, EAP&T
Fog seal	SS-1, SS-1H, CSS-1, CSS-1H
Hot-mixed, cold-laid asphalt mixtures	AC-0.6, AC-1.5, AC-3, AES-300, AES-300P, CMS-2, CMS-2S
Patching mix	MC-800, SCM I, SCM II, AES-300S
Recycling	AC-0.6, AC-1.5, AC-3, AES-150P, AES-300P, recycling agent, emulsified recycling agent
Crack sealing	SS-1P, polymer mod AE crack sealant, rubber asphalt crack sealers (Class A, Class B)
Microsurfacing	CSS-1P
Prime	MC-30, AE-P, EAP&T, PCE
Curing membrane	SS-1, SS-1H, CSS-1, CSS-1H, PCE
Erosion control	SS-1, SS-1H, CSS-1, CSS-1H, PCE

B. Storage and Application Temperatures. Use storage and application temperatures in accordance with Table 19. Store and apply materials at the lowest temperature yielding satisfactory results. Follow the manufacturer's instructions for any agitation requirements in storage. Manufacturer's instructions regarding recommended application and storage temperatures supercede those of Table 19.

Table 19
Storage and Application Temperatures

Type–Grade	Application		Storage Maximum (°F)
	Recommended Range, °F	Maximum Allowable (°F)	
AC-0.6, AC-1.5, AC-3	200–300	350	350
AC-5, AC-10	275–350	350	350
AC-5 w/2% SBR, AC-10 w/2% SBR, AC-15P, AC-20-5TR	300–375	375	360
RC-250	125–180	200	200
RC-800	170–230	260	260
RC-3000	215–275	285	285
MC-30, AE-P	70–150	175	175
MC-250	125–210	240	240
MC-800, SCM I, SCM II	175–260	275	275
MC-3000, MC-2400L	225–275	290	290
HFRS-2, MS-2, CRS-2, CRS-2H, HFRS-2P, CRS-2P, CMS-2, CMS-2S, AES-300, AES-300S, AES-150P, AES-300P	120–160	180	180
SS-1, SS-1H, CSS-1, CSS-1H, PCE, EAP&T, SS-1P, RS-1P, CRS-1P, CSS-1P, recycling agent, emulsified recycling agent, polymer mod AE crack sealant	50–130	140	140
PG binders	275–350	350	350
Rubber asphalt crack sealers (Class A, Class B)	350–375	400	–
A-R binders Types I, II, and III	325–425	425	425

300.5. Measurement and Payment. The work performed, materials furnished, equipment, labor, tools, and incidentals will not be measured or paid for directly, but is subsidiary or is included in payment for other bid Items.

ITEM 302

AGGREGATES FOR SURFACE TREATMENTS

302.1. Description. Furnish aggregate for surface treatments in conformance to the type, grade, and surface aggregate classification (SAC) shown on the plans.

302.2. Materials. Furnish uncontaminated materials of uniform quality throughout that meet the requirements of the plans and specifications. Notify the Engineer of all proposed material sources and of changes to material sources. The Engineer will designate the sampling location.

A. Aggregate. Stockpile aggregates for each source and type separately. Do not add materials to approved stockpiles without the approval of the Engineer.

Furnish aggregate of the type shown on the plans and listed in Table 1. Use Tex-100-E material definitions.

Table 1
Aggregate Types

Type	Material
A	Gravel, crushed slag, crushed stone, or limestone rock asphalt (LRA)
B	Crushed gravel, crushed slag, crushed stone, or LRA
C	Gravel, crushed slag, or crushed stone
D	Crushed gravel, crushed slag, or crushed stone
E	Aggregate as shown on plans
L	Lightweight Aggregate
PA	Precoated gravel, crushed slag, crushed stone, or LRA
PB	Precoated crushed gravel, crushed slag, crushed stone, or LRA
PC	Precoated gravel, crushed slag, or crushed stone
PD	Precoated crushed gravel, crushed slag, crushed stone
PE	Precoated aggregate as shown on the plans
PL	Precoated lightweight aggregate

When tested in accordance with Tex-200-F, Part I, the aggregate gradation must meet the requirements in Table 2 for the specified grade.

Furnish aggregates that meet the quality requirements shown in Table 3, unless otherwise shown on the plans. Provide aggregates from sources listed in the Department's *Bituminous Rated Source Quality Catalog* (BRSQC). If a source is not listed in the catalog or its listed ratings do not meet requirements of the plans, material from that source may be used only when tested by the Engineer and approved before use. Allow 30 calendar days for testing of material from such sources.

Provide aggregates for final surfaces that meet the SAC shown on the plans. Do not blend to meet the SAC. Unless otherwise shown, the SAC requirement will apply only to the aggregate used on the travel lanes. The BRSQC lists the SAC for sources on the Aggregate Quality Monitoring Program (AQMP).

Table 2
Aggregate Gradation Requirements (Cumulative % Retained[1])

Sieve	Grade								
	1	2	3S[2]	3		4S[2]	4	5S[2]	5
				Non-lightweight	Lightweight				
1"	–	–	–	–	–	–	–	–	–
7/8"	0–2	0	–	–	–	–	–	–	–
3/4"	20–35	0–2	0	0	0	–	–	–	–
5/8"	85–100	20–40	0–5	0–2	0–2	0	0	–	–
1/2"	–	80–100	55–85	20–40	10–25	0–5	0–5	0	0
3/8"	95–100	95–100	95–100	80–100	60–80	60–85	20–40	0–5	0–5
1/4"	–	–	–	95–100	95–100	–	–	65–85	–
#4	–	–	–	–	–	95–100	95–100	95–100	50–80
#8	99–100	99–100	99–100	99–100	98–100	98–100	98–100	98–100	98–100

1. Round test results to the nearest whole number.
2. Single-size gradation.

Table 3
Aggregate Quality Requirements

Property	Test Method	Requirement	Remarks
SAC	AQMP	As shown on the plans	
Deleterious material, %, max	Tex-217-F, Part I	2.0	Not required for lightweight aggregate. For LRA, deleterious material includes iron pyrites
Decantation, %, max	Tex-406-A	1.5	
Flakiness index, max	Tex-224-F	17	Unless otherwise shown on the plans
Los Angeles abrasion, %, max	Tex-410-A	35	All aggregates except LRA
		40	LRA
Magnesium sulfate soundness, 5 Cycle, %, max	Tex-411-A	25	
Micro-Deval abrasion, %, max	Tex-461-A	–	Not used for acceptance purposes. Used by the Engineer as an indicator for further investigation.
Coarse aggregate angularity, 2 crushed faces, %, Min	Tex-460-A, Part I	85	Unless otherwise shown on the plans. Only required for crushed gravel
Additional Requirements for Lightweight Aggregate			
Dry loose unit wt., lb./cu. ft.	Tex-404-A	35–60	
Pressure slaking, %, max	Tex-431-A	6.0	
Freeze-thaw loss, %, max	Tex-432-A	10.0	
Water absorption, 24°hr., %, max	Tex-433-A	12.0	Unless otherwise shown on plans.
Additional Requirements for Natural LRA			
Naturally impregnated bitumen content, % by wt.	Tex-236-F	4.0–7.0	
White rock content, % by wt.	Tex-220-F and Tex-236-F	15–35	Applies to aggregate retained on the #4 sieve

B. Precoating. When precoating is shown on the plans, precoat aggregate uniformly and adequately with asphalt material to the satisfaction of the Engineer. When shown on the plans, specific aggregates may be prohibited from being precoated. Do not precoat LRA aggregate that contains visual surface moisture or excessive quantities of fines. Meet Table 2 and 3 requirements before precoating. Furnish precoated aggregate that spreads uniformly using approved mechanical spreading equipment.

The Engineer retains the right to select a target value for the desired percent by weight of residual bitumen coating on the aggregate. Furnish precoated aggregate that is within ±0.3% of the target value

when tested in accordance with Tex-236-F. The Engineer may require trial batches to assist in selecting the target value.

The Engineer retains the right to remove precoat material from aggregate samples in accordance with Tex-210-F and test the aggregate to verify compliance with Table 2 and 3 requirements. Gradation testing may be performed with precoat intact.

1. **Asphalt Material.** Precoat the aggregates with asphalt material that meets the requirements of Item 300, "Asphalts, Oils, and Emulsions." Precoat the LRA with flux oil meeting the requirements of Item 330, "Limestone Rock Asphalt Pavement." Unless a specific precoat material is specified on the plans, use any asphalt material that meets the requirements of Item 300.
2. **Additives.** When shown on the plans, use the type and rate of additive specified. Add in accordance with Item 301, "Asphalt Antistripping Agents." Tex-530-C will be used for verification during production testing, unless otherwise directed.

302.3. Equipment. Manufacture precoated aggregate in a mixing plant that produces uniformly coated aggregate.

302.4. Construction. Deliver aggregate to the locations shown on the plans. Prevent segregation, mixing of the various materials or sizes, and contamination with foreign materials when aggregates are stockpiled. The Engineer will reject contaminated stockpiles.

Provide adequate initial cooling of precoated aggregate to prevent asphalt or aggregate damage due to excessive heat buildup in stockpiles. When asphalt cement is the precoating material, limit stockpile height to 3 ft. immediately after production. Consolidate stockpiles after adequate cooling, as approved. The Engineer will reject stockpiles showing evidence of damage due to excessive heat buildup.

302.5. Measurement and Payment. The work performed, materials furnished, equipment, tools, and incidentals will not be measured or paid for directly but is subsidiary to or is included under "Payment" in other pertinent Items.

ITEM 310

PRIME COAT

310.1. Description. Prepare and treat existing or newly constructed surface with a bituminous material. Apply blotter material as required.

310.2. Materials.

A. Bituminous. Use material of the type and grade shown on the plans in accordance with Item 300, "Asphalts, Oils, and Emulsions."

B. Blotter. Unless otherwise shown on the plans or approved, use either base course sweepings obtained from cleaning the base or native sand as blotter materials.

310.3. Equipment. Provide applicable equipment in accordance with Article 316.3, "Equipment."

310.4. Construction.

A. General. Apply the mixture when the air temperature is 60°F and above, or above 50°F and rising. Measure the air temperature in the shade away from artificial heat. The Engineer will determine when weather conditions are suitable for application.

Do not permit traffic, hauling, or placement of subsequent courses over freshly constructed prime coats. Maintain the primed surface until placement of subsequent courses or acceptance of the work.

B. Surface Preparation. Prepare the surface by sweeping or other approved methods. When directed, before applying bituminous material, lightly sprinkle the surface with water to control dust and ensure absorption.

C. Application.

1. **Bituminous.** The Engineer will select the application temperature within the limits recommended in Item 300, "Asphalts, Oils, and Emulsions." Apply material within 15°F of the selected temperature.

   Distribute the material smoothly and evenly at the rate selected by the Engineer. When directed, roll the freshly applied prime coat with a pneumatic-tire roller to ensure penetration.

2. **Blotter.** Spread blotter material before allowing traffic to use a primed surface. When "Prime Coat and Blotter" is shown on the plans as a bid item, apply blotter material to primed surface at the rate shown in the plans or as directed. When "Prime Coat" is shown on the plans as a bid item, apply blotter to spot locations or as directed to accommodate traffic movement through the work area. Remove blotter material before placing the surface. Dispose of blotter material according to applicable state and federal requirements.

310.5. Measurement. This Item will be measured by the gallon of bituminous material placed and accepted.

310.6. Payment. The work performed and materials furnished in accordance with this Item and measured as provided under "Measurement" will be paid for at the unit price bid for "Prime Coat" or "Prime Coat and Blotter" of the type and grade of bituminous material specified. This price is full compensation for cleaning and sprinkling the area to be primed; materials, including blotter material; and rolling, equipment, labor, tools, and incidentals.

ITEM 316
SURFACE TREATMENTS

316.1. Description. Construct a surface treatment consisting of 1 or more applications of a single layer of asphalt material covered with a single layer of aggregate.

316.2. Materials. Furnish materials of the type and grade shown on the plans in accordance with the following:

- Item 300, "Asphalts, Oils, and Emulsions"
- Item 302, "Aggregates for Surface Treatments."

For final surfaces, unless otherwise shown on the plans, furnish aggregate with a surface aggregate classification of "B" or better.

316.3. Equipment.

A. Distributor. Furnish a distributor that will apply the asphalt material uniformly at the specified rate or as directed.

1. **Transverse Variance Rate.** When a transverse variance rate is shown on the plans, ensure that the nozzles outside the wheel paths will output a predetermined percentage more of asphalt material by volume than the nozzles over the wheel paths.
2. **Calibration.**
   a. **Transverse Distribution.** Furnish a distributor test report, no more than 1 yr. old, documenting that the variation in output for individual nozzles of the same size does not exceed 10% when tested at the greatest shot width in accordance with Tex-922-K, Part III.

      Include the following documentation on the test report:
      - the serial number of the distributor,
      - a method that identifies the actual nozzle set used in the test, and
      - the fan width of the nozzle set at a 12-in. bar height.

      When a transverse variance rate is required, perform the test using the type and grade of asphalt material to be used on the project. The Engineer may verify the transverse rate and distribution at any time. If verification does not meet the requirements, correct deficiencies and furnish a new test report.

   b. **Tank Volume.** Furnish a volumetric calibration and strap stick for the distributor tank in accordance with Tex-922-K, Part I.

      Calibrate the distributor within the previous 5 yr. of the date first used on the project. The Engineer may verify calibration accuracy in accordance with Tex-922-K, Part II.
3. **Computerized Distributor.** When paying for asphalt material by weight, the Engineer may allow use of the computerized distributor display to verify application rates. Verify application rate accuracy at a frequency acceptable to the Engineer.

B. Aggregate Spreader. Use a continuous-feed, self-propelled spreader to apply aggregate uniformly at the specified rate or as directed.

C. Rollers. Unless otherwise shown on the plans, furnish light pneumatic-tire rollers in accordance with Item 210, "Rolling."

D. Broom. Furnish rotary, self-propelled brooms.

E. Asphalt Storage and Handling Equipment. When the plans or the Engineer allows storage tanks, furnish a thermometer in each tank to indicate the asphalt temperature continuously.

Keep equipment clean and free of leaks. Keep asphalt material free of contamination.

F. Aggregate Haul Trucks. Unless otherwise authorized, use trucks of uniform capacity to deliver the aggregate. Provide documentation showing measurements and calculation in cubic yards. Clearly mark the calibrated level. Truck size may be limited when shown on the plans.

G. Digital Measuring Instrument. Furnish a vehicle with a calibrated digital-measuring instrument accurate to ±6 ft. per mile.

316.4. Construction.

A. General. Asphalt application season will be as shown on the plans. Asphalt and aggregate rates shown on the plans are for estimating purposes only. The Engineer will adjust the rates for the existing conditions.

B. Temporary Aggregate Stockpiles. The Engineer will approve the location of temporary aggregate stockpiles on the right of way before delivery. Place stockpiles in a manner that will not:

- obstruct traffic or sight distance,
- interfere with the access from abutting property, or
- interfere with roadway drainage.

Locate stockpiles a minimum of 30 ft. from roadway when possible. Sign and barricade as shown on the plans.

C. Aggregate Furnished by the Department. When shown on the plans, the Department will furnish aggregate to the Contractor without cost. Stockpile locations are shown on the plans.

D. Adverse Weather Conditions. Do not place surface treatments when, in the Engineer's opinion, general weather conditions are unsuitable. Meet the requirements for air and surface temperature shown below.

1. **Standard Temperature Limitations.** Apply surface treatment when air temperature is above 50°F and rising. Do not apply surface treatment when air temperature is 60°F and falling. In all cases, do not apply surface treatment when surface temperature is below 60°F.
2. **Polymer-Modified Asphalt Cement Temperature Limitations.** When using materials described in Section 300.2.B, "Polymer Modified Asphalt Cement," apply surface treatment when air temperature is above 70°F and rising. Do not apply surface treatment when air temperature is 80°F and falling. In all cases, do not apply surface treatment when surface temperature is below 70°F.

3. **Asphalt Material Designed for Winter Use.** When winter asphalt application is allowed, the Engineer will approve the air and surface temperature for asphalt material application. Apply surface treatment at air and surface temperatures as directed.

E. **Surface Preparation.** Remove existing raised pavement markers. Repair any damage incurred by removal as directed. Remove dirt, dust, or other harmful material before sealing. When shown on the plans, remove vegetation and blade pavement edges.

F. **Rock Land and Shot.**

1. **Definitions.**
   - A "rock land" is the area covered at the aggregate rate directed with 1 truckload of aggregate.
   - A "shot" is the area covered by 1 distributor load of asphalt material.
2. **Setting Lengths.** Calculate the lengths of both rock land and shot. Adjust shot length to be an even multiple of the rock land. Verify that the distributor has enough asphalt material to complete the entire shot length. Mark shot length before applying asphalt. When directed, mark length of each rock land to verify the aggregate rate.

G. **Asphalt Placement.**

1. **General.** The maximum shot width is the width of the current transverse distribution test required under Section 316.3.A.2, "Transverse Distribution," or the width of the aggregate spreader box, whichever is less. Adjust the shot width so operations do not encroach on traffic or interfere with the traffic control plan, as directed. Use paper or other approved material at the beginning and end of each shot to construct a straight transverse joint and to prevent overlapping of the asphalt. Unless otherwise approved, match longitudinal joints with the lane lines. The Engineer may require a string line if necessary to keep joints straight with no overlapping. Use sufficient pressure to flare the nozzles fully.

   Select an application temperature, as approved, in accordance with Item 300, "Asphalts, Oils, and Emulsions." Uniformly apply the asphalt material at the rate directed, within 15°F of the approved temperature, and not above the maximum allowable temperature.
2. **Limitations.** Do not apply asphalt to the roadway until:
   - traffic control methods and devices are in place as shown on the plans or as directed,
   - the loaded aggregate spreader is in position and ready to begin,
   - haul trucks are loaded with enough aggregate to cover the shot area, and
   - haul trucks are in place behind the spreader box.
3. **Nonuniform Application.** Stop application if it is not uniform due to streaking, ridging, puddling, or flowing off the roadway surface. Verify equipment condition, operating procedures, application temperature, and material properties. Determine and correct the cause of nonuniform application. If the cause is high or low emulsion viscosity, replace emulsion with material that corrects the problem.

4. **Test Strips.** The Engineer may stop asphalt application and require construction of test strips at the Contractor's expense if any of the following occurs:
   - nonuniformity of application continues after corrective action;
   - on 3 consecutive shots, application rate differs by more than 0.03 gal. per square yard from the rate directed; or
   - any shot differs by more than 0.05 gal. per square yard from the rate directed.

   The Engineer will approve the test strip location. The Engineer may require additional test strips until surface treatment application meets specification requirements.

H. Aggregate Placement. As soon as possible, apply aggregate uniformly at the rate directed without causing the rock to roll over.

I. Rolling. Start rolling operation on each shot as soon as aggregate is applied. Use sufficient rollers to cover the entire mat width in 1 pass, i.e., 1 direction. Roll in a staggered pattern. Unless otherwise shown on the plans, make a minimum of:
- 5 passes or
- 3 passes when the asphalt material is an emulsion.

If rollers are unable to keep up with the spreader box, stop application until rollers have caught up, or furnish additional rollers. Keep roller tires asphalt-free.

J. Patching. Before rolling, repair spots where coverage is incomplete. Repair can be made by hand spotting or other approved method. When necessary, apply additional asphalt material to embed aggregate.

K. Brooming. After rolling, sweep as soon as aggregate has sufficiently bonded to remove excess.

L. Final Acceptance. Maintain surface treatment until the Engineer accepts the work. Repair any surface failures. Before final project acceptance, remove all temporary stockpiles and restore the area to the original contour and grade.

316.5. Measurement.

A. Asphalt Material. Unless otherwise shown on the plans, asphalt material will be measured by one of the following methods:

1. **Volume.** Asphalt material will be measured at the applied temperature by strapping the tank before and after road application and determining the net volume in gallons from the distributor's calibrated strap stick. The quantity to be measured for payment will be the number of gallons used, as directed, in the accepted surface treatment.

2. **Weight.** Asphalt material will be measured in tons using certified scales meeting the requirements of Item 520, "Weighing and Measuring Equipment," unless otherwise approved. The transporting truck must have a seal attached to the draining device and other openings. The Engineer may require random checking on public scales at the Contractor's expense to verify weight accuracy.

   Upon work completion or temporary suspension, any remaining asphalt material will be weighed by a certified public weigher, or measured by volume in a calibrated distributor or tank and the quantity converted to tons at the measured

temperature. The quantity to be measured will be the number of tons received minus the number of tons remaining after all directed work is complete and minus the amount used for other items.

B. Aggregate. Aggregate will be measured by the cubic yard in the trucks as applied on the road. The Engineer may require loaded aggregate to be struck off for accurate measurement.

C. Loading, Hauling, and Distributing Aggregate. When the Department furnishes the aggregate, the loading, hauling, and distributing will be measured by the cubic yard in the trucks as applied on the road.

316.6. Payment. The work performed and materials furnished in accordance with this Item and measured as provided under “Measurement” will be paid for at the unit prices bid for “Asphalt,” “Aggregate,” and “Loading, Hauling, and Distributing Aggregate” of the types–grades specified. These prices are full compensation for surface preparation; furnishing, preparing, hauling, and placing materials; removing existing pavement markers and excess aggregate; rolling; cleaning up stockpiles; and equipment, labor, tools, and incidentals.

ITEM 330

LIMESTONE ROCK ASPHALT PAVEMENT

330.1. Description. Construct a base course, a surface course, a level-up course, or any combination of these courses of the types and grades shown on the plans using a cold mixed material consisting of native limestone rock asphalt (LRA) aggregate, fluxing material, water, and when specified, additives and virgin aggregates.

330.2. Materials. Type I LRA mixture consists entirely of native LRA aggregate, flux material, water, and additives. Type II LRA mixture consists of a blend of native LRA aggregate, virgin aggregates, fluxing material, additives, and water. Furnish uncontaminated materials of uniform quality that meet the requirements of the plans and specifications.

Notify the Engineer of all materials sources. Notify the Engineer before changing any material source or formulation. When making a source or formulation change, the Engineer will verify that the specification requirements are met and may require a new laboratory mixture design, trial batch, or both. The Engineer may sample and test project materials at any time throughout the duration of the project to assure specification compliance.

A. Aggregate. Furnish aggregates from sources that conform to the requirements shown in Table 1, and as specified in this Section, unless otherwise shown on the plans. Provide aggregate stockpiles that meet the definition in this Section for either a coarse aggregate or fine aggregate. Supply mechanically crushed gravel or stone aggregates that meet the definitions in Tex-100-E. The Engineer will designate the plant or the quarry as the sampling location. Samples must be from materials produced for the project. The Engineer will establish the surface aggregate classification (SAC) and perform Los Angeles abrasion, magnesium sulfate soundness, and Micro-Deval tests. Perform all other aggregate quality tests listed in Table 1. Document all test results. The Engineer may run tests on independent or split samples to verify Contractor test results. Stockpile aggregates for each source and type separately.

1. Coarse Aggregate. Coarse aggregate stockpiles must have no more than 20% material passing the No. 10 sieve. Provide aggregates from sources listed in the Department's *Bituminous Rated Source Quality Catalog* (BRSQC). Provide nonlisted sources only when tested by the Engineer and approved before use. Allow 30 calendar days for the Engineer to sample, test, and report results for nonlisted sources.

Provide coarse aggregate with a minimum SAC as shown on the plans. SAC requirements apply only to aggregates used on the surface of travel lanes, unless otherwise shown on the plans. The SAC for sources on the Department's Aggregate Quality Monitoring Program (AQMP) is listed in the BRSQC.

When a Type II LRA mixture is specified, Class B aggregate may be blended with Class A aggregate in order to meet requirements for Class A materials. When blending Class A and B aggregates to meet a Class A requirement, ensure that at least 50% by weight of the material retained on the No. 4 sieve comes from the Class A aggregate source. Blend virgin aggregate with native LRA aggregate in the percentages shown in Table 4. When blending, do not use Class C aggregates.

a. LRA Aggregate. Native LRA aggregate consists of limestone impregnated with naturally occurring asphalt. LRA aggregates that contain less than 1% of naturally occurring asphalt are defined as white rock. Each aggregate source proposed for use will be sampled and tested to determine compliance with Table 1 requirements before the addition of fluxing material, additives, and water.

b. Virgin Aggregate. Provide virgin aggregates that meet the requirements of Table 1. Each aggregate source proposed for use will be sampled and tested to determine compliance with Table 1 requirements before the addition of fluxing material, additives, and water.

2. **Fine Aggregate.** Fine aggregate stockpiles must have no more than 30% material retained on the No. 10 sieve. Supply fine aggregates that are free from organic impurities. The Engineer may test the fine aggregate in accordance with Tex-408-A to verify that the material is free from organic impurities. Use only fine aggregates generated by the production and handling of LRA or the virgin coarse aggregate. Use LRA fine aggregate that has a naturally impregnated bitumen content of 5.0 to 8.5% when tested in accordance with Tex-236-F.

   If 10% or more of the stockpile is retained on the No. 4 sieve, test the stockpile and verify that it meets the requirements in Table 1 for Coarse Aggregate Angularity (Tex-460-A) and Flat and Elongated Particles (Tex-280-F).

Table 1
Aggregate Quality Requirements

Property	Test Method	Requirement	
		Native LRA Aggregate	Virgin Aggregate
Coarse Aggregate			
SAC	AQMP	B or C as shown on the plans	A
Deleterious material, %, Max	Tex-217-F, Part I	1.5	1.5
Decantation, %, Max	Tex-217-F, Part II	N/A	1.5
Micro-Deval abrasion, %, Max	Tex-461-A	Note 1	Note 1
Los Angeles abrasion, %, Max	Tex-410-A	40	25
Magnesium sulfate soundness, 5 cycles, %, Max	Tex-411-A	30	25
Coarse aggregate angularity, 2 crushed faces, %, Min	Tex-460-A, Part I	N/A	85[2]
Flat and elongated particles @ 5:1, %, Max	Tex-280-F	N/A	10
Combined Aggregate[3]			
Naturally impregnated bitumen content, total combined gradation, % by wt.	Tex-236-F	5.0 to 8.5	N/A

1. Not used for acceptance purposes. Used by the Engineer as an indicator of the need for further investigation.
2. Unless otherwise shown on the plans. Only applies to crushed gravel.
3. Aggregates, without added mineral filler or additives, combined as used in the job mix formula (JMF).

B. Asphalt Material.

1. **Fluxing Material.** Provide fluxing material, composed of flux oil (a blend of asphalt and oil) or a blend of flux oil and aromatic oil meeting the requirements of Table 2. When required by the Engineer, provide a test report showing that the fluxing material meets the requirements of Table 2. Use fluxing material in the paving mixture to meet the workability requirements of Section 330.4.E, "Mixing."

Table 2
Fluxing Material Properties

Property	Material	Flux Oil		Aromatic Oil	
	Test Procedure	Min	Max	Min	Max
Kinematic viscosity, 140°F, cSt	T 201	60	200	–	150
Loss on heating, % by wt.	T 47	–	10	–	12
Water, %	T 55	–	0.2	–	0.2
Flash point, C.O.C., °F	T 48	200	–	135	–

2. **Water.** Provide water that meets the requirements of Item 204, "Sprinkling."

3. **Tack Coat.** Unless otherwise shown on the plans or approved, furnish CSS-1H, SS-1H, or a performance-graded (PG) binder with a minimum high-temperature grade of PG 58 for tack coat binder in accordance with Item 300, "Asphalts, Oils, and Emulsions." Do not dilute emulsified asphalts at the terminal, in the field, or at any other location before use. If required, verify that emulsified asphalt proposed for use meets the minimum residual asphalt percentage specified in Item 300.

   The Engineer will obtain at least 1 sample of the tack coat per project and test the sample for specification compliance. The Engineer will obtain the sample from the asphalt distributor, immediately before use.

C. Additives. When shown on the plans, use the type and rate of additive specified. Other additives that facilitate mixing or improve the quality of the mixture may be allowed when approved. Approved additives must be listed in the Quality Control Plan (QCP) as specified in Article 330.4, "Construction."

If lime is specified or selected for use as an antistripping agent, add only to the virgin aggregate in accordance with Item 301, "Asphalt Antistripping Agents." If a liquid antistripping agent is used, add in accordance with Item 301. Do not add lime directly into the mixing drum of any plant where lime is removed through the exhaust stream, unless the plant has a baghouse or dust collection system that re-introduces the lime back into the drum.

330.3. Equipment. Provide required or necessary equipment in accordance with Item 320, "Equipment for Asphalt Concrete Pavement." Use either weigh-batch or continuous mixing plants. The following requirements are modifications or additions to those in Item 320.

A. Weigh-Batch Plants.

1. **Screening and Proportioning.** Provide a sufficient number of bins as specified in Article 330.4, "Construction."
2. **Fluxing Material Measuring System.** Provide a fluxing material measuring device in the fluxing material line leading to the mixer to accurately determine the accumulated amount of fluxing material. Make permanent provisions for checking the accuracy of the meter output. Provide scales to hold and weigh flux for 1 batch.
3. **Mixer.** Equip the mixer with a spray bar that will distribute the fluxing material quickly and uniformly throughout the mixer.

B. Continuous Mixing Plants.

1. **Screening and Proportioning.** Meet the requirements of Section 330.3.A.1.a, "Screening and Proportioning." These requirements also apply to stockpiled material proposed for direct use by a continuous mixing plant without the use of plant bins.
2. **Fluxing Material Measuring System.** Place a fluxing material measuring device in the fluxing material line leading to the mixer to accurately determine the accumulated amount of fluxing material. Make permanent provisions for checking the accuracy of the meter output.
3. **Mixer.** Provide a continuous type mixer large enough to produce not less than 40 tons of mixture per hour. Equip the mixer with a spray bar that will distribute the fluxing material quickly and uniformly throughout the mixer.

330.4. Construction. Provide quality control (QC) testing as needed to meet the requirements of this Item. The Department will perform quality assurance (QA) testing.

A. QCP. Develop and follow the QCP in detail. Obtain approval from the Engineer for changes to the QCP made during the project. The Engineer may suspend operations if the Contractor fails to comply with the QCP.

Submit a written QCP to the Engineer. Receive the Engineer's approval of the QCP before beginning production. Include the following items in the QCP.

1. **Project Personnel.** For project personnel, include:
   - a list of individuals responsible for quality control with authority to take corrective action and
   - contact information for each individual listed.
2. **Material Delivery and Storage.** For material delivery and storage, include:
   - the sequence of material processing, delivery, and minimum quantities to assure continuous plant operations;
   - aggregate stockpiling procedures to avoid contamination and segregation;
   - frequency, type, and timing of LRA and aggregate stockpile testing to assure conformance of material requirements before mixture production;
   - flux oil for use in the LRA mixture; and
   - aromatic oil for use in the LRA mixture.
3. **Production.** For production, include:
   - loader operation procedures to avoid contamination in cold bins;
   - the number of bins and the aggregate size to be placed in each bin for each type of LRA mixture produced;
   - procedures for calibrating and controlling cold feeds;
   - procedures to eliminate debris and oversized material;
   - procedures for adding and verifying rates of each applicable mixture component (i.e., LRA, white rock, aggregates, flux oil) to minimize the formation of flux balls;
   - procedures for LRA mixture testing to assure conformance of material requirements during production;
   - procedures for reporting job control test results; and
   - procedures to avoid segregation in the silo.
4. **Loading and Transporting.** For loading and transporting, include:
   - type and application method for release agents and
   - truck and rail car loading procedures to avoid segregation.
5. **Placement and Compaction.** For placement and compaction, include:
   - proposed arrangements for any required prepaving meetings, including dates and locations;
   - type and application method for release agents in the paver and on rollers, shovels, lutes, and other utensils;
   - procedures for the transfer of mixture into the paver while avoiding segregation and preventing material spillage;
   - process to balance production, delivery, paving, and compaction to achieve continuous placement operations;
   - paver operations (e.g., operation of wings, height of mixture in auger chamber) to avoid physical and thermal segregation and other surface irregularities; and
   - procedures to construct quality longitudinal and transverse joints.

B. Stockpiling of Aggregates and LRA. Provide a smooth and well-drained area, cleared of trash, weeds, and grass. Build stockpiles in a manner that will minimize aggregate degradation and segregation. Avoid contamination and mixing of stockpiles.

Provide LRA or aggregate stockpiles for a minimum of 2 days' production before beginning plant operations. Maintain at least a 2-day aggregate supply through the course of the project unless otherwise directed.

Stockpile aggregates for each source and type separately. Do not add material to an approved stockpile unless otherwise approved. Handle and load the LRA in a manner that prevents segregation. The Engineer may reject stockpiled materials that come in contact with the earth or other objectionable material.

In addition to the requirements listed above, the material storage and stockpile requirements must be included in the approved QCP.

C. Storage and Heating of Fluxing Material. Do not heat fluxing material to a temperature more than that specified by the manufacturer. Ensure that the flux material storage capacity meets the requirements of the plant.

D. Job-Mix Formula. Provide a job-mix formula (JMF) design report for a paving mixture that meets the requirements of Tables 3, 4, and 5. Identify in the report the combined aggregate gradation, the percentage of each material component used in the mixture, and results of all applicable tests. Obtain approval of the JMF before starting production. With approval, the JMF target values may be adjusted as needed within the percentage point tolerances of Table 6 without a laboratory redesign of the mixture. If the adjustments exceed the tolerances shown in Table 6, the Engineer may require a new mixture design. Adjustments must not exceed the master gradation for the type of mixture specified on the plans.

Determine the aggregate and asphalt correction factors from the ignition oven using Tex-236-F. Provide the Engineer with split samples of the mixtures and blank samples used to determine the correction factors. The Engineer will use the split samples provided by the Contractor to determine the aggregate and asphalt correction factors for the ignition oven in accordance with Tex-236-F.

If the aggregate mineralogy is such that Tex-236-F does not yield reliable results, the Engineer may allow alternate methods for determining the asphalt content and aggregate gradation. Unless otherwise allowed, the Engineer will require the Contractor to provide evidence that results from Tex-236-F are not reliable before permitting an alternate method. If an alternate test method is allowed, use the applicable test procedure as directed.

Table 3
Master Grading per Tex-200-F, Part I, % Retained by Weight

Sieve Size	Type I						Type II			
	Grade						Grade			
	AA Coarse Base	A Medium Base	B Fine Base	C Course Surface	CC Medium Surface	D Fine Surface	BS Surface	CS Medium Surface	DS Fine Surface	FS Thin Surface
1-1/2"	0	–	–	–	–	–	–	–	–	–
1-1/4"	0–10	–	–	–	–	–	–	–	–	–
1"	–	0	–	–	–	–	–	–	–	–
7/8"	15–30	0–2	–	–	–	–	–	–	–	–
3/4"	–	–	–	–	–	–	0	–	–	–
5/8"	–	5–15	0	–	–	–	0–2	0	–	–
1/2"	–	–	0–2	0	0	–	0–10	0–2	0	–
3/8"	25–45	25–35	5–15	0–2	0–2	0	10–25	0–10	0–2	0
1/4"	–	–	–	–	–	0–2	–	–	–	–
#4	45–60	50–60	45–60	35–50	35–50	10–25	40–55	35–55	10–25	0–15
#10	60–75	65–75	60–75	65–80	50–65	50–65	60–75	60–75	50–65	35–60

Table 4
Mixture Components % by Weight

Mixture Component	Type I						Type II			
	Grade						Grade			
	AA Coarse Base	A Medium Base	B Fine Base	C Course Surface	CC Medium Surface	D Fine Surface	BS Surface	CS Medium Surface	DS Fine Surface	FS Thin Surface
White rock[1]	N/A	15–35	15–35	15–35	15–35	15–35	15–35	15–35	15–35	N/A
LRA	96–98	96–98	96–98	96–98	96–98	96–98	72–80.5	72–80.5	72–80.5	36.5–63.5
Virgin aggregate	N/A	N/A	N/A	N/A	N/A	N/A	18–25	18– 25	18–25	35–60
Flux material	2.0–4.0	2.0–4.0	2.0–4.0	2.0–4.0	2.0–4.0	2.0–4.0	1.5–3.0	1.5–3.0	1.5–3.0	1.5–3.5

1. White rock values are given as a percentage of total LRA aggregate.

Table 5
Mixture Properties

Property	Test Method	Requirement
Hveem stability, min	Tex-208-F	35[1]
Laboratory-molded density, %	Tex-207-F	89.0 ±2
Theoretical maximum specific gravity of bituminous mixtures	Tex-227-F	N/A
Bitumen content, % by wt.	Tex-236-F	6.5 to 11.0
Water and light hydrocarbon volatiles, %, max	Tex-212-F, Part II	5.5
Boil test, %	Tex-530-C	10[2]

1. Cease operations if 2 consecutive tests fail. The Engineer may waive this requirement if other information indicates that the next material to be produced will meet the minimum value specified.
2. May be increased or eliminated when directed by the Engineer.

Table 6
Deviations from Current JMF Target Values

Material	Test Method	Tolerance
Individual % retained for #10 sieves and larger	Tex-200-F	±5.0
Individual % retained for sieves smaller than #10 and larger than #200		±3.0
% passing the #200 sieve		±2.0
Fluxing material, %	Determined from quantity used	±0.2

E. Mixing. Produce all LRA mixtures in the same mixing plant, unless otherwise approved. When needed, mix aromatic oil into the mixing chamber independently of the fluxing material. The aromatic oil may not exceed 35% of the total weight of the combined fluxing material and aromatic oil used in the paving mixture.

The Engineer will not accept mixtures produced when the LRA aggregate or virgin aggregate contains moisture above the saturated surface dry condition. Inspect for visual surface moisture on the aggregates or any unusual quantities of fines clinging to the coarse aggregate.

Mix the materials at a central mixing plant and ship ready to use. Add water when necessary to improve workability of the mixture. Ensure that the mixture leaves the plant in a workable condition. The Engineer may reject mixtures that do not remain workable for a period that is sufficient to permit loading, unloading, hauling, placing, and compacting. Provide materials that remain workable in a stockpile for at least 6 months.

F. Hauling Operations. Transport the LRA mixture to the project or delivery point in trucks or rail cars as needed. Before use, clean all truck beds or rail cars to ensure mixture is not contaminated. When a release agent is necessary, use a release agent on the approved list maintained by the Construction Division to coat truck beds and inside rail cars. Waterproof tarpaulins are not required to cover loads.

G. Placement Operations. Prepare the surface by removing raised pavement markers and objectionable material such as moisture, dirt, sand, leaves, and other loose impediments from the surface before placing mixture. Remove vegetation from pavement edges. Place the mixture to meet the typical section requirements and produce a smooth, finished surface with a uniform appearance and texture. Offset longitudinal joints of successive courses of mixture by at least 6 in. Place mixture so

longitudinal joints on the surface course coincide with lane lines, or as directed. Ensure that all finished surfaces will drain properly.

Unless otherwise shown on the plans, the asphalt mixture may be dumped in a windrow and then placed in the finishing machine with windrow pickup equipment. Prevent the windrow pickup equipment from contaminating the mixture.

After placing the paving mixture, defer compaction, as directed by the Engineer, to allow for volatilization. When placing more than 1 pavement course, allow the previous course to dry and cure before placing the next course. Unless otherwise directed, the course will be considered cured if the hydrocarbon volatile content of the mixture is 0.4% or less by weight of the mixture when tested according to Tex-213-F.

When shown on the plans or as approved, a motor grader may be used to spread the mixture. Thoroughly aerate the mixture and spread into place with a power motor grader in a uniform layer. Placement in narrow strips or small irregular areas may require hand spreading.

1. **Weather Conditions.** Place the mixture when the roadway surface temperature is 60°F or higher unless otherwise approved. Place the mixture only when the weather conditions and moisture conditions of the roadway surface are suitable in the opinion of the Engineer.
2. **Tack Coat.** Clean the surface before placing the tack coat. Unless otherwise approved, apply tack coat uniformly at the rate directed by the Engineer. The Engineer will set the rate between 0.04 and 0.10 gal. of residual asphalt per square yard of surface area. Apply a thin, uniform tack coat to all contact surfaces of curbs, structures, and joints. Prevent splattering of the tack coat when placed adjacent to curb, gutter, and structures. Roll the tack coat with a pneumatic-tire roller when directed. The Engineer may use Tex-243-F to verify that the tack coat has adequate adhesive properties. The Engineer may suspend paving operations until there is adequate adhesion.

H. Compaction. Furnish the type, size, and number or rollers required for compaction, as approved. Furnish at least 1 medium pneumatic-tire roller (minimum 12-ton weight). Use Tex-207-F, Part IV, to establish rolling patterns that achieve maximum compaction. Follow the selected rolling pattern unless changes that affect compaction occur in the mixture or placement conditions. When such changes occur, establish a new rolling pattern. Compact the pavement to the cross section of the finished paving mixture meeting the requirements of the plans and specifications. Unless otherwise directed, operate vibratory rollers in static mode when: not compacting, changing directions, or the plan depth of the pavement mat is less than 1-1/2 in.

When rolling with the 3-wheel, tandem, or vibratory rollers, start by first rolling the joint with the adjacent pavement and then continue by rolling longitudinally at the sides. Proceed toward the center of the pavement, overlapping on successive trips by at least 1 ft., unless otherwise directed. Make alternate trips of the roller slightly different in length. On superelevated curves, begin rolling at the low side and progress toward the high side, unless otherwise directed.

Avoid displacement of the mixture. If any displacement occurs, correct to the satisfaction of the Engineer. Ensure pavement is fully compacted before allowing rollers to stand on the pavement. Unless otherwise directed, use only water or an approved release agent on rollers, tamps, and other compaction equipment. Keep diesel, gasoline, oil, grease, and other foreign matter off the mixture.

Use tamps to thoroughly compact the edges of the pavement along curbs, headers, and similar structures and in locations that will not allow thorough compaction with the rollers. The Engineer may require rolling with a trench roller on widened areas, in trenches, and in other limited areas.

I. Irregularities. Immediately take corrective actions if surface irregularities, including but not limited to segregation, rutting, raveling, flushing, fat spots, mat slippage, color, texture, roller marks, tears, gouges, streaks, or uncoated aggregate particles, are detected. The Engineer may allow placement to continue for at most 1 day of production while the Contractor takes appropriate action. If the problem still exists after that day, suspend paving until the problem is corrected to the satisfaction of the Engineer.

At the expense of the Contractor and to the satisfaction of the Engineer, remove and replace any mixture that does not bond to the existing pavement or that has other surface irregularities identified above.

J. Ride Quality. Use Surface Test Type A to evaluate ride quality in accordance with Item 585, "Ride Quality for Pavement Surfaces," unless otherwise shown on the plans.

330.5. Measurement. LRA pavement will be measured by the ton of composite LRA pavement of the type actually used in the completed and accepted work in accordance with the plans and specifications for the project. Measure on scales in accordance with Item 520, "Weighing and Measuring Equipment." Keep records on tare weight, gross weight, and net weight of the LRA paving mixture for each load of the same type of mixture. All water and light hydrocarbon volatiles in the mixture, in excess of 5.5% by weight at the time of weighing, will be deducted from the net weight to determine the quantity for payment.

330.6. Payment. The work performed and materials furnished in accordance with this Item and measured as provided under "Measurement" will be paid for at the unit price bid for "Limestone Rock Asphalt Pavement" of the type, grade and surface aggregate classification specified.

These prices are full compensation for surface preparation, materials including tack coat, placement, equipment, labor, tools, and incidentals.

Pay adjustment for ride quality, when required, will be determined in accordance with Item 585, "Ride Quality for Pavement Surfaces."

ITEM 334

HOT-MIX COLD-LAID ASPHALT CONCRETE PAVEMENT

334.1. Description. Construct a cold-laid pavement layer composed of a compacted mixture of aggregate and asphalt material mixed hot in a mixing plant.

This Item governs mixtures designed for cold placement, defined as placement temperatures below 175°F. If the mixture placement temperature is greater than 175°F, then design, produce, place, and compact the mixture in accordance with the applicable hot-mix asphalt specification.

334.2. Materials. Furnish uncontaminated materials of uniform quality that meet the requirements of the plans and specifications.

Notify the Engineer of all material sources. Notify the Engineer before changing any material source or formulation. When the Contractor makes a source or formulation change, the Engineer will verify that the specification requirements are met and may require a new laboratory mixture design, trial batch, or both. The Engineer may sample and test project materials at any time during the project to assure specification compliance.

A. Aggregate. Furnish aggregates from sources that conform to the requirements shown in Table 1 and on the plans. Unless otherwise directed, the Engineer will obtain the aggregate samples from materials produced for the project and perform the tests in Table 1. Mechanically crushed gravel or stone aggregates must meet the definitions in Tex-100-E. The Engineer will designate the plant or the quarry as the sampling location, and will determine aggregate gradations for mixture design and production testing based on the washed sieve analysis given in Tex-200-F, Part II. Do not add material to an approved stockpile from sources that do not meet the aggregate quality requirements of the Department's *Bituminous Rated Source Quality Catalog* (BRSQC) unless otherwise approved.

1. **Coarse Aggregate.** Coarse aggregate stockpiles must have no more than 20% material passing the No. 8 sieve. Provide aggregates from sources listed in the BRSQC. Provide nonlisted sources only when tested by the Engineer and approved before use. Allow 30 calendar days for the Engineer to sample, test, and report results for nonlisted sources.

   Provide coarse aggregate with at least the minimum surface aggregate classification (SAC) shown on the plans. SAC requirements apply only to aggregates used on the surface of travel lanes, unless otherwise shown on the plans. The SAC for sources on the Department's Aggregate Quality Monitoring Program (AQMP) is listed in the BRSQC.

   Class B aggregate meeting all other requirements in Table 1 may be blended with a Class A aggregate in order to meet requirements for Class A materials. When blending Class A and B aggregates to meet a Class A requirement, ensure that at least 50% by weight of the material retained on the No. 4 sieve comes from the Class A aggregate source. Blend by volume if the bulk specific gravities of the Class A and B aggregates differ by more than 0.300. When blending, do not use Class C or D aggregates.

2. **Fine Aggregate.** Fine aggregates consist of manufactured sands, screenings, and field sands. Fine aggregate stockpiles must meet the gradation requirements in Table 2. Supply fine aggregates that are free from organic impurities. The Engineer may test the fine aggregate in accordance with Tex-408-A to verify that the material is free from organic impurities. No more than 15% of the total aggregate may be field sand or other uncrushed fine aggregate. With the exception of field sand, use fine aggregate from coarse aggregate sources that meet the requirements shown in Table 1, unless otherwise approved.

   If 10% or more of the stockpile is retained on the No. 4 sieve, test the stockpile and verify that it meets the requirements in Table 1 for coarse aggregate angularity (Tex-460-A) and flat and elongated particles (Tex-280-F).

Table 1
Aggregate Quality Requirements

Property	Test Method	Requirement
Coarse Aggregate		
SAC	AQMP	As shown on the plans
Deleterious material, %, max	Tex-217-F, Part I	1.5
Decantation, %, max	Tex-217-F, Part II	1.5
Micro-Deval abrasion, %, max	Tex-461-A	Note 1
Los Angeles abrasion, %, max	Tex-410-A	40
Magnesium sulfate soundness, 5 cycles, %, max	Tex-411-A	30[2]
Coarse aggregate angularity, 2 crushed faces, %, min	Tex-460-A, Part I	85[3]
Flat and elongated particles @ 5:1, %, max	Tex-280-F	10
Fine Aggregate		
Linear shrinkage, %, max	Tex-107-E	3
Combined Aggregates[4]		
Sand equivalent, %, min	Tex-203-F	45

1. Not used for acceptance purposes. Used by the Engineer as an indicator of the need for further investigation.
2. Unless otherwise shown on the plans.
3. Unless otherwise shown on the plans. Only applies to crushed gravel.
4. Aggregates, without added mineral filler or additives, combined as used in the job-mix formula (JMF).

Table 2
Gradation Requirements for Fine Aggregates

Sieve Size	% Passing by Weight or Volume
3/8"	100
#8	70–100
#200	0–15

B. Mineral Filler. Mineral filler consists of finely divided mineral matter such as agricultural lime, crusher fines, hydrated lime, cement, or fly ash. Mineral filler is allowed unless otherwise shown on the plans. Do not use more than 2% hydrated lime or cement, unless otherwise shown on the plans. The plans may require or disallow specific mineral fillers. When used, provide mineral filler that:

- is sufficiently dry, free-flowing, and free from clumps and foreign matter;
- does not exceed 3% linear shrinkage when tested in accordance with Tex-107-E; and
- meets the gradation requirements in Table 3.

Table 3
Gradation Requirements for Mineral Fillers

Sieve	% Passing by Weight or Volume
#8	100
#200	55–100

C. Baghouse Fines. Fines collected by the baghouse or other dust-collecting equipment may be reintroduced into the mixing drum.

D. Binder Material. Furnish asphalt, primer, additives, and water, unless otherwise shown on the plans.

1. **Asphalt.** Provide the asphalt shown on the plans, meeting the requirements of Item 300, "Asphalts, Oils, and Emulsions."

2. **Primer.** Provide an approved asphalt primer consisting of a blend of asphalt cement and hydrocarbon volatiles.

3. **Water.** Provide water that meets the requirements of Item 204, "Sprinkling."

4. **Additives.** When shown on the plans, use the type and rate of additive specified. Other additives that facilitate mixing or improve the quality of the mixture may be allowed when approved.

   If lime or a liquid antistripping agent is used, add in accordance with Item 301, "Asphalt Antistripping Agents." Do not add lime directly into the mixing drum of any plant where lime is removed through the exhaust stream unless the plant has a baghouse or dust collection system that reintroduces the lime back into the drum.

E. Tack Coat. Unless otherwise shown on the plans or approved, furnish CSS-1H, SS-1H, or a performance-graded (PG) binder with a minimum high-temperature grade of PG 58 for tack coat in accordance with Item 300, "Asphalts, Oils, and Emulsions." Do not dilute emulsified asphalts at the terminal, in the field, or at any other location before use. The Department may sample the tack coat to verify specification compliance.

334.3. Equipment. Provide required or necessary equipment in accordance with Item 320, "Equipment for Asphalt Concrete Pavement."

334.4. Construction. Design, produce, store, transport, place, and compact the specified paving mixture in accordance with the requirements of this Item. Unless otherwise shown on the plans, provide the mix design. The Department will perform quality assurance (QA) testing. Provide quality control (QC) testing as needed to meet the requirements of this Item.

A. Mixture Design.

1. **Design Requirements.** Unless otherwise shown on the plans, use the typical weight design example given in Tex-204-F, Part I, to design a paving mixture that consists of a uniform mixture of aggregate, asphalt material, primer, additives, and water if allowed, which meets the requirements shown in Tables 4 and 5. Ensure that the mixture leaves the plant in a workable condition. Provide materials that remain workable in a stockpile for at least 6 mo.

   At any time during the project, the Contractor may submit a new mixture design. The Engineer must approve all mixture designs before the Contractor can begin production.

2. **Job-Mix Formula Approval.** The job-mix formula (JMF) is the combined aggregate gradation and target asphalt percentage used to establish target values for mixture production. JMF1 is the original laboratory mixture design used to produce the trial batch. The Engineer will verify JMF1 based on plant-produced mixture from the trial batch unless otherwise approved. The Engineer may accept an existing mixture design previously used on a Department project and may waive the trial batch to verify JMF1. Provide the Engineer with split samples of the mixtures and blank samples used to determine the ignition oven correction factors. The Engineer will determine the aggregate and asphalt correction factors from the ignition oven using Tex-236-F.

Table 4
Master Gradation Bands (% Passing by Weight or Volume)
and Volumetric Properties

Sieve Size	A Coarse Base	B Fine Base	C Coarse Surface	D Fine Surface	F Fine Mixture
1-1/2"	98.0–100.0	–	–	–	–
1"	78.0–94.0	98.0–100.0	–	–	–
3/4"	64.0–85.0	84.0–98.0	95.0–100.0	–	–
1/2"	50.0–70.0	–	–	98.0–100.0	–
3/8"	–	60.0–80.0	70.0–85.0	85.0–100.0	98.0–100.0
#4	30.0–50.0	40.0–60.0	43.0–63.0	50.0–70.0	80.0–86.0
#8	22.0–36.0	29.0–43.0	32.0–44.0	35.0–46.0	38.0–48.0
#30	8.0–23.0	13.0–28.0	14.0–28.0	15.0–29.0	12.0–27.0
#50	3.0–19.0	6.0–20.0	7.0–21.0	7.0–20.0	6.0–19.0
#200	2.0–7.0	2.0–7.0	2.0–7.0	2.0–7.0	2.0–7.0
Design VMA[1], % Minimum					
–	12.0	13.0	14.0	15.0	16.0
Plant-Produced VMA[1], % Minimum					
–	11.0	12.0	13.0	14.0	15.0

1. Voids in mineral aggregates.

Table 5
Laboratory Mixture Design Properties

Property	Test Method	Requirement
Target laboratory-molded density, %[1]	Tex-207-F	92.5 ±1.5
Hveem stability, min	Tex-208-F	35
Hydrocarbon-volatile content, %, max	Tex-213-F	0.6
Moisture content, %, max[2]	Tex-212-F	1.0
Boil test, %, max[3]	Tex-530-C	10

1. Unless otherwise shown on the plans.
2. Unless otherwise approved.
3. Limit may be increased or eliminated when approved by the Engineer.

B. Production Operations. Perform a new trial batch when the plant or plant location is changed. Take corrective action and obtain approval to proceed after any production suspension for noncompliance to the specification.

1. **Stockpiling of Aggregates.** Provide a smooth and well-drained area, cleared of trash, weeds, and grass. Build stockpiles in a manner that will minimize aggregate degradation and segregation. Avoid contamination and mixing of stockpiles. Provide aggregate stockpiles for a minimum of 2 days' production before beginning plant operations. Maintain at least a 2-day aggregate supply through the course of the project unless otherwise directed. Stockpile aggregate for each source and type separately. The Engineer may reject stockpiled materials that come in contact with the earth or other objectionable material.

2. **Storage and Heating of Asphalt Materials.** Provide enough asphalt material storage capacity to meet the requirements of the plant. Do not heat the asphalt binder above the temperatures specified in Item 300, "Asphalts, Oils, and Emulsions," or from the manufacturer's recommended values. Keep all equipment used in the storage and handling of asphalt material clean at all times and operate the equipment in a manner that will prevent contamination with foreign matter.

3. **Storage of the Asphalt Mixture.** Store the asphalt mixture in a surge-storage system or in a stockpile. If the asphalt mixture is stored in a stockpile, provide a smooth and well-drained area, cleared of trash, weeds, and grass. Build stockpiles in a manner that will minimize aggregate degradation and segregation. Avoid contamination and mixing of stockpiles.

4. **Mixing and Discharge of Materials.** Produce the mixture at a discharge temperature between 145°F and 275°F, as directed. Do not allow the temperature to vary from the selected temperature by more than 25°F. The Department will not pay for or allow placement of any mixture produced at more than 300°F.

5. **Moisture Content.** Furnish the mixture at a moisture content of at most 1% by weight when discharged from the mixer, unless otherwise shown on the plans or approved. Cease operations at moisture contents above 1% until corrective actions reduce moisture content.

C. **Hauling Operations.** Before use, clean all truck beds to ensure mixture is not contaminated. When a release agent is necessary to coat truck beds, use a release agent on the approved list maintained by the Construction Division.

D. **Placement Operations.** Prepare the surface by removing raised pavement markers and objectionable material such as moisture, dirt, sand, leaves, and other loose impediments from the surface before placing mixture. Remove vegetation from pavement edges. Place mixture on the road below 175°F. Place the mixture to produce a smooth, finished surface with a uniform appearance and texture that meet typical section requirements. Offset longitudinal joints of successive courses of mixture by at least 6 in. Place mixture so longitudinal joints on the surface course coincide with lane lines, or as directed. Ensure that all finished surfaces will drain properly.

Unless otherwise shown on the plans, the asphalt mixture may be dumped in a windrow and then placed in the finishing machine with windrow pickup equipment. Prevent the windrow pickup equipment from contaminating the mixture.

After placing the paving mixture, defer compaction, as directed by the Engineer, to allow for volatilization. When placing more than 1 pavement course, allow the previous course to dry and cure before placing the next course. Unless otherwise directed, the course will be considered cured if the hydrocarbon volatile content of the mixture is 0.4% or less by weight of the mixture when tested according to Tex-213-F.

When shown on the plans or as approved, a motor grader may be used to spread the mixture. Thoroughly aerate the mixture and spread into place with a power motor grader in a uniform layer. Placement in narrow strips or small irregular areas may require hand spreading.

1. **Weather Conditions.** Place the mixture when the roadway surface temperature is 60°F or higher unless otherwise approved. Unless otherwise shown on the plans, place mixtures only when weather conditions and moisture conditions of the roadway surface are suitable in the opinion of the Engineer.

2. **Tack Coat.** Clean the surface before placing the tack coat. Unless otherwise approved, apply tack coat uniformly at the rate directed by the Engineer. The Engineer will set the rate between 0.04 and 0.10 gal. of residual asphalt per square yard of surface area. Apply a thin, uniform tack coat to all contact surfaces of curbs, structures, and joints. Prevent splattering of the tack coat when placed adjacent to curb, gutter, and structures. Roll the tack coat with a pneumatic-tire roller when directed. The Engineer may use Tex-243-F to verify that the tack coat has adequate adhesive properties. The Engineer may suspend paving operations until there is adequate adhesion.

E. **Compaction.** Furnish the type, size, and number or rollers required for compaction, as approved. Furnish at least 1 medium pneumatic-tire roller (minimum 12-ton weight). Use the control strip method given in Tex-207-F, Part IV, to establish rolling patterns that achieve maximum compaction. Follow the selected rolling pattern unless changes that affect compaction occur in the mixture or placement conditions. When such changes occur, establish a new rolling pattern. Compact the pavement to the cross section of the finished paving mixture meeting the requirements of the plans and specifications. Unless otherwise directed, operate vibratory rollers in static mode when not compacting, when changing directions, or when the plan depth of the pavement mat is less than 1-1/2 in.

When rolling with the 3-wheel tandem or vibratory rollers, start by first rolling the joint with the adjacent pavement and then continue by rolling longitudinally at the sides. Proceed toward the center of the pavement, overlapping on successive trips by at least 1 ft., unless otherwise directed. Make alternate trips of the roller slightly different in length. On superelevated curves, begin rolling at the low side and progress toward the high side unless otherwise directed.

Avoid displacement of the mixture. If any displacement occurs, correct to the satisfaction of the Engineer. Ensure pavement is fully compacted before allowing rollers to stand on the pavement.

Unless otherwise directed, use only water or an approved release agent on rollers, tamps, and other compaction equipment. Keep diesel, gasoline, oil, grease, and other foreign matter off the mixture.

Use tamps to thoroughly compact the edges of the pavement along curbs, headers, and similar structures and in locations that will not allow thorough compaction with the rollers. The Engineer may require rolling with a trench roller on widened areas, in trenches, and in other limited areas.

Allow the compacted pavement to cool to 160°F or lower before opening to traffic unless otherwise directed. When directed, sprinkle the finished mat with water or limewater to expedite opening the roadway to traffic.

F. Production Testing and Operational Tolerances. The aggregate gradation and the asphalt binder content of the produced mixture must not vary from the JMF by more than the percentage point tolerances shown in Table 6. The gradation of the produced mixture may fall outside the master grading limits for any of the sieve sizes from the 1-1/2 in. through the No. 50 sieve if it is within the JMF tolerances. The aggregate gradation of the No. 200 sieve may not exceed the master gradations shown in Table 4. Any sieve size shown in Table 4 with 100% passing requirements will be allowed a 2% tolerance before the material is considered out of specification.

If the aggregate mineralogy is such that Tex-236-F does not yield reliable results, the Engineer may allow alternate methods for determining the asphalt content and aggregate gradation. Unless otherwise allowed, the Engineer will require the Contractor to provide evidence that results from Tex-236-F are not reliable before permitting an alternate method. If an alternate test method is allowed, use the applicable test procedure as directed.

If during production, 3 consecutive tests indicate that the material produced exceeds the tolerances shown in Table 6 for any individual sieve or for laboratory-molded density, cease production until corrective actions are taken and the results approved. If 2 consecutive tests indicate that the asphalt binder content tolerances shown in Table 6 are exceeded, cease production until corrective actions are taken and the results approved.

If the Hveem stability shown in Table 5 is not met for 3 consecutive tests, cease production until corrective actions are taken and the results approved.

Table 6
Operational Tolerances

Property	Test Method	Operational Tolerance From JMF
Individual % retained for sieve sizes smaller than 1-1/2" and larger than #8	Tex-200-F	±5.0
Individual % retained for sieve sizes smaller than #8		±3.0
Asphalt binder content, %	Tex-236-F	±0.3
Laboratory-molded density, %	Tex-207-F	±1.0

G. Irregularities. Immediately take corrective action if surface irregularities, including but not limited to segregation, rutting, raveling, flushing, fat spots, mat slippage, color, texture, roller marks, tears, gouges, streaks, or uncoated aggregate particles, are detected. The Engineer may suspend production or placement operations until the problem is corrected.

At the expense of the Contractor and to the satisfaction of the Engineer, remove and replace any mixture that does not bond to the existing pavement or that has other surface irregularities identified above.

H. Ride Quality. Use Surface Test Type A to evaluate ride quality in accordance with Item 585, “Ride Quality for Pavement Surfaces,” unless otherwise shown on the plans.

334.5. Measurement. This Item will be measured by the by the ton of composite asphalt concrete mixture of the type used in the completed and accepted work.

Measurement will be made on scales in accordance with Item 520, “Weighing and Measuring Equipment.”

For mixture produced by a weigh-batch plant or a modified weigh-batch plant, measurement will be determined on the batch scales unless surge-storage or stockpiling is used. Keep records of the number of batches, batch design, and the weight of the composite asphalt concrete mixture. The composite asphalt concrete mixture is defined as the asphalt, primer, aggregate, additives, and any residual moisture that is not designated to be deducted. Where surge-storage or stockpiling is used, measurement of the material taken from the surge-storage bin or stockpile will be made on truck scales or suspended hopper scales.

334.6. Payment. The work performed and materials furnished in accordance with this Item and measured as provided under Article 334.5, "Measurement," will be paid for at the unit price bid for "Hot-Mix Cold-Laid Asphalt Concrete Pavement" of the type, surface aggregate classification, and asphalt binder specified.

This price is full compensation for surface preparation, materials including tack coat, placement, equipment, labor, tools, and incidentals.

Pay adjustment for ride quality, when required, will be determined in accordance with Item 585, "Ride Quality for Pavement Surfaces."

ITEM 340

DENSE-GRADED HOT-MIX ASPHALT (METHOD)

340.1. Description. Construct a pavement layer composed of a compacted, dense-graded mixture of aggregate and asphalt binder mixed hot in a mixing plant.

340.2. Materials. Furnish uncontaminated materials of uniform quality that meet the requirements of the plans and specifications.

Notify the Engineer of all material sources. Notify the Engineer before changing any material source or formulation. When the Contractor makes a source or formulation change, the Engineer will verify that the requirements of this Item are met and may require a new laboratory mixture design, trial batch, or both. The Engineer may sample and test project materials at any time during the project to verify compliance.

A. Aggregate. Furnish aggregates from sources that conform to the requirements shown in Table 1, and as specified in this Section, unless otherwise shown on the plans. Provide aggregate stockpiles that meet the definition in this Section for either coarse aggregate or fine aggregate. When reclaimed asphalt pavement (RAP) is allowed by plan note, provide RAP stockpiles in accordance with this Section. Aggregate from RAP is not required to meet Table 1 requirements unless otherwise shown on the plans. Supply mechanically crushed gravel or stone aggregates that meet the definitions in Tex-100-E. The Engineer will designate the plant or the quarry as the sampling location. Samples must be from materials produced for the project. The Engineer will establish the surface aggregate classification (SAC) and perform Los Angeles abrasion, magnesium sulfate soundness, and Micro-Deval tests. Perform all other aggregate quality tests listed in Table 1. Document all test results on the mixture design report. The Engineer may perform tests on independent or split samples to verify Contractor test results. Stockpile aggregates for each source and type separately. Determine aggregate gradations for mixture design and production testing based on the washed sieve analysis given in Tex-200-F, Part II. Do not add material to an approved stockpile from sources that do not meet the aggregate quality requirements of the Department's *Bituminous Rated Source Quality Catalog* (BRSQC) unless otherwise approved.

1. **Coarse Aggregate.** Coarse aggregate stockpiles must have no more than 20% material passing the No. 8 sieve. Provide aggregates from sources listed in the BRSQC. Provide aggregate from nonlisted sources only when tested by the Engineer and approved before use. Allow 30 calendar days for the Engineer to sample, test, and report results for nonlisted sources.

   Provide coarse aggregate with at least the minimum SAC shown on the plans. SAC requirements apply only to aggregates used on the surface of travel lanes, unless otherwise shown on the plans. The SAC for sources on the Department's AQMP is listed in the BRSQC.

   Class B aggregate meeting all other requirements in Table 1 may be blended with a Class A aggregate in order to meet requirements for Class A materials. When blending Class A and B aggregates to meet a Class A requirement, ensure that at least 50% by weight of the material retained on the No. 4 sieve comes from the Class A aggregate source. Blend by volume if the bulk specific gravities of the Class A and B aggregates differ by more than 0.300. When blending, do not use Class C or D aggregates. For blending purposes, coarse aggregate from RAP will be considered as Class B aggregate.

2. **RAP.** RAP is salvaged, milled, pulverized, broken, or crushed asphalt pavement. Crush or break RAP so that 100% of the particles pass the 2-in. sieve.

   RAP from either Contractor- or Department-owned sources, including RAP generated during the project, is permitted only when shown on the plans. Department-owned RAP, if allowed for use, will be available at the location shown on the plans. When RAP is used, determine asphalt content and gradation for mixture design purposes. Perform other tests on RAP when shown on the plans.

   When RAP is allowed by plan note, use no more than 30% RAP in Type A or B mixtures unless otherwise shown on the plans. For all other mixtures, use no more than 20% RAP unless otherwise shown on the plans.

Do not use RAP contaminated with dirt or other objectionable materials. Do not use the RAP if the decantation value exceeds 5% and the plasticity index is greater than 8. Test the stockpiled RAP for decantation in accordance with the laboratory method given in Tex-406-A, Part I. Determine the plasticity index using Tex-106-E if the decantation value exceeds 5%. The decantation and plasticity index requirements do not apply to RAP samples with asphalt removed by extraction.

Do not intermingle Contractor-owned RAP stockpiles with Department-owned RAP stockpiles. Remove unused Contractor-owned RAP material from the project site upon completion of the project. Return unused Department-owned RAP to the designated stockpile location.

3. **Fine Aggregate.** Fine aggregates consist of manufactured sands, screenings, and field sands. Fine aggregate stockpiles must meet the gradation requirements in Table 2. Supply fine aggregates that are free from organic impurities. The Engineer may test the fine aggregate in accordance with Tex-408-A to verify the material is free from organic impurities. At most 15% of the total aggregate may be field sand or other uncrushed fine aggregate. With the exception of field sand, use fine aggregate from coarse aggregate sources that meet the requirements shown in Table 1, unless otherwise approved.

   If 10% or more of the stockpile is retained on the No. 4 sieve, test the stockpile and verify that it meets the requirements in Table 1 for coarse aggregate angularity (Tex-460-A) and flat and elongated particles (Tex-280-F).

Table 1
Aggregate Quality Requirements

Property	Test Method	Requirement
Coarse Aggregate		
SAC	AQMP	As shown on plans
Deleterious material, %, max	Tex-217-F, Part I	1.5
Decantation, %, max	Tex-217-F, Part II	1.5
Micro-Deval abrasion, %, max	Tex-461-A	Note 1
Los Angeles abrasion, %, max	Tex-410-A	40
Magnesium sulfate soundness, 5 cycles, %, max	Tex-411-A	30[2]
Coarse aggregate angularity, 2 crushed faces, %, min	Tex 460-A, Part I	85[3]
Flat and elongated particles @ 5:1, %, max	Tex-280-F	10
Fine Aggregate		
Linear shrinkage, %, max	Tex-107-E	3
Combined Aggregate[4]		
Sand equivalent, %, min	Tex-203-F	45

1. Not used for acceptance purposes. Used by the Engineer as an indicator of the need for further investigation.
2. Unless otherwise shown on the plans.
3. Unless otherwise shown on the plans. Only applies to crushed gravel.
4. Aggregates, without mineral filler, RAP, or additives, combined as used in the job-mix formula (JMF).

Table 2
Gradation Requirements for Fine Aggregate

Sieve Size	% Passing by Weight or Volume
3/8"	100
#8	70–100
#200	0–30

B. Mineral Filler. Mineral filler consists of finely divided mineral matter such as agricultural lime, crusher fines, hydrated lime, cement, or fly ash. Mineral filler is allowed unless otherwise shown on the plans. Do not use more than 2% hydrated lime or cement, unless otherwise shown on the plans. The plans may require or disallow specific mineral fillers. When used, provide mineral filler that:

- is sufficiently dry, free-flowing, and free from clumps and foreign matter;
- does not exceed 3% linear shrinkage when tested in accordance with Tex-107-E; and
- meets the gradation requirements in Table 3.

Table 3
Gradation Requirements for Mineral Filler

Sieve Size	% Passing by Weight or Volume
#8	100
#200	55–100

C. Baghouse Fines. Fines collected by the baghouse or other dust-collecting equipment may be reintroduced into the mixing drum.

D. Asphalt Binder. Furnish the type and grade of performance-graded (PG) asphalt binder specified on the plans in accordance with Section 300.2.J, "Performance-Graded Binders."

E. Tack Coat. Unless otherwise shown on the plans or approved, furnish CSS-1H, SS-1H, or a PG binder with a minimum high-temperature grade of PG 58 for tack coat binder in accordance with Item 300, "Asphalts, Oils, and Emulsions."

Do not dilute emulsified asphalts at the terminal, in the field, or at any other location before use. If required, verify that emulsified asphalt proposed for use meets the minimum residual asphalt percentage specified in Item 300, "Asphalts, Oils, and Emulsions."

The Engineer will obtain at least 1 sample of the tack coat binder per project and test it to verify compliance with Item 300. The Engineer will obtain the sample from the asphalt distributor immediately before use.

F. Additives. When shown on the plans, use the type and rate of additive specified. Other additives that facilitate mixing or improve the quality of the mixture may be allowed when approved.

If lime or a liquid antistripping agent is used, add in accordance with Item 301, "Asphalt Antistripping Agents." Do not add lime directly into the mixing drum of any plant where lime is removed through the exhaust stream unless the plant has a baghouse or dust collection system that reintroduces the lime back into the drum.

340.3. Equipment. Provide required or necessary equipment in accordance with Item 320, "Equipment for Asphalt Concrete Pavement."

340.4. Construction. Design, produce, store, transport, place, and compact the specified paving mixture in accordance with the requirements of this Item. Unless otherwise shown on the plans, provide the mix design. The Department will perform quality assurance (QA) testing. Provide quality control (QC) testing as needed to meet the requirements of this Item.

A. Mixture Design.

1. **Design Requirements.** Use a Level II specialist certified by a Department-approved hot-mix asphalt certification program to develop the mixture design. Have the Level II specialist sign the design documents. Unless otherwise shown on the plans, use the typical weight design example given in Tex-204-F, Part I, to design a mixture meeting the requirements listed in Tables 1 through 6. Use an approved laboratory to perform the Hamburg Wheel test and provide results with the mixture design, or provide the laboratory mixture and request that the Department perform the Hamburg Wheel test. The Construction Division maintains a list of approved laboratories. Furnish the Engineer with representative samples of all materials used in the mixture design. The Engineer will verify the mixture design. If the design cannot be verified by the Engineer, furnish another mixture design.

   The Contractor may submit a new mixture design at anytime during the project. The Engineer will approve all mixture designs before the Contractor can begin production.

   Provide the Engineer with a mixture design report using Department-provided software. Include the following items in the report:
   - the combined aggregate gradation, source, specific gravity, and percent of each material used;
   - results of all applicable tests;
   - the mixing and molding temperatures;
   - the signature of the Level II person or persons who performed the design;
   - the date the mixture design was performed; and
   - a unique identification number for the mixture design.

Table 4
Master Gradation Bands (% Passing by Weight or Volume)
and Volumetric Properties

Sieve Size	A Coarse Base	B Fine Base	C Coarse Surface	D Fine Surface	F Fine Mixture
1-1/2"	98.0–100.0	–	–	–	–
1"	78.0–94.0	98.0–100.0	–	–	–
3/4"	64.0–85.0	84.0–98.0	95.0–100.0	–	–
1/2"	50.0–70.0	–	–	98.0–100.0	–
3/8"	–	60.0–80.0	70.0–85.0	85.0–100.0	98.0–100.0
#4	30.0–50.0	40.0–60.0	43.0–63.0	50.0–70.0	80.0–86.0
#8	22.0–36.0	29.0–43.0	32.0–44.0	35.0–46.0	38.0–48.0
#30	8.0–23.0	13.0–28.0	14.0–28.0	15.0–29.0	12.0–27.0
#50	3.0–19.0	6.0–20.0	7.0–21.0	7.0–20.0	6.0–19.0
#200	2.0–7.0	2.0–7.0	2.0–7.0	2.0–7.0	2.0–7.0
Design VMA[1], % Minimum					
–	12.0	13.0	14.0	15.0	16.0
Plant-Produced VMA, % Minimum					
–	11.0	12.0	13.0	14.0	15.0

1. Voids in Mineral Aggregates.

Table 5
Laboratory Mixture Design Properties

Property	Test Method	Requirement
Target laboratory-molded density, %	Tex-207-F	96.0[1]
Tensile strength (dry), psi (molded to 93% ±1% density)	Tex-226-F	85–200[2]
Boil test[3]	Tex-530-C	–

1. Unless otherwise shown on the plans.
2. May exceed 200 psi when approved and may be waived when approved.
3. Used to establish baseline for comparison to production results. May be waived when approved.

Table 6
Hamburg Wheel Test Requirements[1]

High-Temperature Binder Grade	Minimum # of Passes[2] @ 0.5" Rut Depth, Tested @ 122°F
PG 64 or lower	10,000
PG 70	15,000
PG 76 or higher	20,000

1. Tested in accordance with Tex-242-F.
2. May be decreased or waived when shown on the plans.

B. Job-Mix Formula Approval. The job-mix formula (JMF) is the combined aggregate gradation and target asphalt percentage used to establish target values for mixture production. JMF is the original laboratory mixture design used to produce the trial batch. The Engineer and the Contractor will verify JMF based on plant-produced mixture from the trial batch unless otherwise approved. The Engineer may accept an existing mixture design previously used on a Department project and may waive the trial batch to verify JMF. If the JMF is not verified by the Engineer from the trial batch, adjust the JMF or redesign the mix and produce as many trial batches as necessary to verify the JMF.

Provide the Engineer with split samples of the mixtures and blank samples used to determine the ignition oven correction factors. The Engineer will determine the aggregate and asphalt correction factors from the ignition oven using Tex-236-F.

The Engineer will use a Texas gyratory compactor calibrated in accordance with Tex-914-F in molding production samples.

The Engineer will perform Tex-530-C and retain the tested sample for comparison purposes during production. The Engineer may waive the requirement for the boil test.

C. JMF Field Adjustments. Produce a mixture of uniform composition closely conforming to the approved JMF.

If, during initial days of production, the Contractor or Engineer determines that adjustments to the JMF are necessary to achieve the specified requirements, or to more nearly match the aggregate production, the Engineer may allow adjustment of the JMF within the tolerances of Table 7 without a laboratory redesign of the mixture.

The Engineer will adjust the asphalt content to maintain desirable laboratory density near the optimum value while achieving other mix requirements.

Table 7
Operational Tolerances

Description	Test Method	Allowable Difference from JMF Target
Individual % retained for #8 sieve and larger	Tex-200-F or Tex-236-F	±5.0[1]
Individual % retained for sieves smaller than #8 and larger than #200		±3.0[1]
% passing the #200 sieve		±2.0[1]
Asphalt content, %	Tex-236-F	±0.3[1]
Laboratory-molded density, %	Tex-207-F	±1.0
VMA, %, min		Note 2

1. When within these tolerances, mixture production gradations may fall outside the master grading limits; however, the percent passing the #200 sieve will be considered out of tolerance when outside the master grading limits.
2. Test and verify that Table 4 requirements are met.

D. Production Operations. Perform a new trial batch when the plant or plant location is changed. The Engineer may suspend production for noncompliance with this Item. Take corrective action and obtain approval to proceed after any production suspension for noncompliance.

1. **Operational Tolerances.** During production, do not exceed the operational tolerances in Table 7. Stop production if testing indicates tolerances are exceeded on:
   - 3 consecutive tests on any individual sieve,
   - 4 consecutive tests on any of the sieves, or
   - 2 consecutive tests on asphalt content.

   Begin production only when test results or other information indicate, to the satisfaction of the Engineer, that the next mixture produced will be within Table 7 tolerances.

2. **Storage and Heating of Materials.** Do not heat the asphalt binder above the temperatures specified in Item 300, “Asphalts, Oils, and Emulsions” or outside the manufacturer’s recommended values. On a daily basis, provide the Engineer with the records of asphalt binder and hot-mix asphalt discharge temperatures in accordance with Item 320, “Equipment for Asphalt Concrete Pavement.” Unless otherwise approved, do not store mixture for a period long enough to affect the quality of the mixture, nor in any case longer than 12 hr.

3. **Mixing and Discharge of Materials.** Notify the Engineer of the target discharge temperature and produce the mixture within 25°F of the target. Monitor the temperature of the material in the truck before shipping to ensure that it does not exceed 350°F. The Department will not pay for or allow placement of any mixture produced at more than 350°F. Control the mixing time and temperature so that substantially all moisture is removed from the mixture before discharging from the plant.

E. Hauling Operations. Before use, clean all truck beds to ensure mixture is not contaminated. When a release agent is necessary to coat truck beds, use a release agent on the approved list maintained by the Construction Division.

F. Placement Operations. Prepare the surface by removing raised pavement markers and objectionable material such as moisture, dirt, sand, leaves, and other loose impediments from the surface before placing mixture. Remove vegetation from pavement edges. Place the mixture to meet the typical section requirements and produce a smooth, finished surface with a uniform appearance and texture. Offset longitudinal joints of successive courses of hot mix by at least 6 in. Place mixture so longitudinal joints on the surface course coincide with lane lines, or as directed. Ensure that all finished surfaces will drain properly. Place mixture within the compacted lift thickness shown in Table 8, unless otherwise shown on the plans or allowed.

Table 8
Compacted Lift Thickness and Required Core Height

Mixture Type	Compacted Lift Thickness	
	Minimum (in.)	Maximum (in.)
A	3.00	6.00
B	2.50	5.00
C	2.00	4.00
D	1.50	3.00
F	1.25	2.50

1. **Weather Conditions.** Place mixture when the roadway surface temperature is 60°F or higher unless otherwise approved. Measure the roadway surface temperature with a handheld infrared thermometer. Unless otherwise shown on the plans, place mixtures only when weather conditions and moisture conditions of the roadway surface are suitable in the opinion of the Engineer.
2. **Tack Coat.** Clean the surface before placing the tack coat. Unless otherwise approved, apply tack coat uniformly at the rate directed by the Engineer. The Engineer will set the rate between 0.04 and 0.10 gal. of residual asphalt per square yard of surface area. Apply a thin, uniform tack coat to all contact surfaces of curbs, structures, and all joints. Prevent splattering of tack coat when placed adjacent to curb, gutter, and structures. Roll the tack coat with a pneumatic-tire roller when directed. The Engineer may use Tex-243-F to verify that the tack coat has adequate adhesive properties. The Engineer may suspend paving operations until there is adequate adhesion.

G. Lay-Down Operations.

1. **Minimum Mixture Placement Temperatures.** Use Table 9 for suggested minimum mixture placement temperatures.
2. **Windrow Operations.** When hot mix is placed in windrows, operate windrow pickup equipment so that substantially all the mixture deposited on the roadbed is picked up and loaded into the paver.

Table 9
Suggested Minimum Mixture Placement Temperature

High-Temperature Binder Grade	Minimum Placement Temperature (Before Entering Paver)
PG 64 or lower	260°F
PG 70	270°F
PG 76	280°F
PG 82 or higher	290°F

H. Compaction. Use air void control unless ordinary compaction control is specified on the plans. Avoid displacement of the mixture. If displacement occurs, correct to the satisfaction of the Engineer. Ensure pavement is fully compacted before allowing rollers to stand on the pavement. Unless otherwise directed, use only water or an approved release agent on rollers, tamps, and other compaction equipment. Keep diesel, gasoline, oil, grease, and other foreign matter off the mixture. Unless otherwise directed, operate vibratory rollers in static mode when not compacting, when changing directions, or when the plan depth of the pavement mat is less than 1-1/2 in.

Use tamps to thoroughly compact the edges of the pavement along curbs, headers, and similar structures and in locations that will not allow thorough compaction with the rollers. The Engineer may require rolling with a trench roller on widened areas, in trenches, and in other limited areas.

Allow the compacted pavement to cool to 160°F or lower before opening to traffic unless otherwise directed. When directed, sprinkle the finished mat with water or limewater to expedite opening the roadway to traffic.

1. **Air Void Control.** Compact dense-graded hot-mix asphalt to contain from 5% to 9% in-place air voids. Do not increase the asphalt content of the mixture to reduce pavement air voids.
   a. **Rollers.** Furnish the type, size, and number or rollers required for compaction, as approved. Use a pneumatic-tire roller to seal the surface, unless otherwise shown on the plans. Use additional rollers as required to remove any roller marks.

b. **Air Void Determination.** Unless otherwise shown on the plans, obtain 2 roadway specimens at each location selected by the Engineer for in-place air void determination. The Engineer will measure air voids in accordance with Tex-207-F and Tex-227-F. Before drying to a constant weight, cores may be predried using a Corelok or similar vacuum device to remove excess moisture. The Engineer will use the average air void content of the 2 cores to calculate the in-place air voids at the selected location.

c. **Air Voids Out of Range.** If the in-place air void content in the compacted mixture is below 5% or greater than 9%, change the production and placement operations to bring the in-place air void content within requirements. The Engineer may suspend production until the in-place air void content is brought to the required level, and may require a test section as described in Section 340.4.H.1.d, "Test Section."

d. **Test Section.** Construct a test section of 1 lane-width and at most 0.2 mi. in length to demonstrate that compaction to between 5% and 9% in-place air voids can be obtained. Continue this procedure until a test section with 5% to 9% in-place air voids can be produced. The Engineer will allow only 2 test sections per day. When a test section producing satisfactory in-place air void content is placed, resume full production.

2. **Ordinary Compaction Control.** Furnish the type, size, and number or rollers required for compaction, as approved. Furnish at least 1 medium pneumatic-tire roller (minimum 12-ton weight). Use the control strip method given in Tex-207-F, Part IV, to establish rolling patterns that achieve maximum compaction. Follow the selected rolling pattern unless changes that affect compaction occur in the mixture or placement conditions. When such changes occur, establish a new rolling pattern. Compact the pavement to meet the requirements of the plans and specifications.

   When rolling with the 3-wheel, tandem or vibratory rollers, start by first rolling the joint with the adjacent pavement and then continue by rolling longitudinally at the sides. Proceed toward the center of the pavement, overlapping on successive trips by at least 1 ft., unless otherwise directed. Make alternate trips of the roller slightly different in length. On superelevated curves, begin rolling at the low side and progress toward the high side unless otherwise directed.

I. **Irregularities.** Immediately take corrective action if surface irregularities, including but not limited to segregation, rutting, raveling, flushing, fat spots, mat slippage, color, texture, roller marks, tears, gouges, streaks, or uncoated aggregate particles, are detected. The Engineer may suspend production or placement operations until the problem is corrected.

   At the expense of the Contractor and to the satisfaction of the Engineer, remove and replace any mixture that does not bond to the existing pavement or that has other surface irregularities identified above.

J. **Ride Quality.** Use Surface Test Type A to evaluate ride quality in accordance with Item 585, "Ride Quality for Pavement Surfaces," unless otherwise shown on the plans.

340.5. Measurement. Hot mix will be measured by the ton of composite hot mix, which includes asphalt, aggregate, and additives. Measure the weight on scales in accordance with Item 520, "Weighing and Measuring Equipment."

340.6. Payment. The work performed and materials furnished in accordance with this Item and measured as provided under "Measurement" will be paid for at the unit price bid for "Dense-Graded Hot-Mix Asphalt (Method)" of the type, surface aggregate classification, and binder specified. These prices are full compensation for surface preparation, materials including tack coat, placement, equipment, labor, tools, and incidentals.

Trial batches will not be paid for unless they are incorporated into pavement work approved by the Department.

Pay adjustment for ride quality, when required, will be determined in accordance with Item 585, "Ride Quality for Pavement Surfaces."

ITEM 360

CONCRETE PAVEMENT

360.1. Description. Construct hydraulic cement concrete pavement with or without curbs on the concrete pavement.

360.2. Materials.

A. Hydraulic Cement Concrete. Provide hydraulic cement concrete in accordance with Item 421, "Hydraulic Cement Concrete," except that strength over-design is not required. Provide Class P concrete designed to meet a minimum average flexural strength of 570 psi or a minimum average compressive strength of 3,500 psi at 7 days or a minimum average flexural strength of 680 psi or a minimum average compressive strength of 4,400 psi at 28 days. Test in accordance with Tex-448-A or Tex-418-A.

When shown on the plans or allowed, provide Class HES concrete for very early opening of small pavement areas or leave-outs to traffic. Design Class HES to meet the requirements of Class P and a minimum average flexural strength of 400 psi or a minimum average compressive strength of 2,600 psi in 24 hr., unless other early strength and time requirements are shown on the plans or allowed. No strength over-design is required. Type III cement is allowed for Class HES concrete.

Use Class A or P concrete for curbs that are placed separately from the pavement. Provide concrete that is workable and cohesive, possesses satisfactory finishing qualities, and conforms to the mix design and mix design slump.

B. Reinforcing Steel. Provide Grade 60 deformed steel for bar reinforcement in accordance with Item 440, "Reinforcing Steel." Provide approved positioning and supporting devices (baskets and chairs) capable of securing and holding the reinforcing steel in proper position before and during paving. Provide corrosion protection when shown on the plans.

1. **Dowels.** Provide smooth, straight dowels of the size shown on the plans, free of burrs, and conforming to the requirements of Item 440, "Reinforcing Steel." Coat dowels with a thin film of grease or other approved de-bonding material. Provide dowel caps on the lubricated end of each dowel bar used in an expansion joint. Provide dowel caps filled with a soft compressible material with enough range of movement to allow complete closure of the expansion joint.

2. **Tie Bars.** Provide straight deformed steel tie bars. Provide either multiple-piece tie bars or single-piece tie bars as shown on the plans. Provide multiple-piece tie bars composed of 2 pieces of deformed reinforcing steel with a coupling capable of developing a minimum tensile strength of 125% of the design yield strength of the deformed steel when tensile-tested in the assembled configuration. Provide a minimum length of 33 diameters of the deformed steel in each piece. Use multiple-piece tie bars from the list of "Prequalified Multiple Piece Tie Bar Producers" maintained by the Construction Division, or submit samples for testing in accordance with Tex-711-I.

C. Curing Materials. Provide Type 2 membrane curing compound conforming to DMS-4650, "Hydraulic Cement Concrete Curing Materials and Evaporation Retardants." Provide SS-1 emulsified asphalt conforming to Item 300, "Asphalts, Oils, and Emulsions," for concrete pavement to be overlayed with asphalt concrete under this Contract unless otherwise shown on the plans or approved. Provide materials for other methods of curing conforming to the requirements of Item 420, "Concrete Structures."

D. Epoxy. Provide Type III epoxy in accordance with DMS-6100, "Epoxies and Adhesives," for installing all drilled-in reinforcing steel.

E. Evaporation Retardant. Provide evaporation retardant conforming to DMS-4650, "Hydraulic Cement Concrete Curing Materials and Evaporation Retardants."

F. Joint Sealants and Fillers. Provide Class 5 or Class 8 joint-sealant materials and fillers unless otherwise shown on the plans or approved and other sealant materials of the size, shape, and type shown on the plans in accordance with DMS-6310, "Joint Sealants and Fillers."

360.3. Equipment. Furnish and maintain all equipment in good working condition. Use measuring, mixing, and delivery equipment conforming to the requirements of Item 421, "Hydraulic Cement Concrete." Obtain approval for other equipment used.

A. Placing, Consolidating, and Finishing Equipment. Provide approved self-propelled paving equipment that uniformly distributes the concrete with minimal segregation and provides a smooth machine-finished consolidated concrete pavement conforming to plan line and grade. Provide an approved automatic grade control system on slip-forming equipment. Provide approved mechanically operated finishing floats capable of producing a uniformly smooth pavement surface. Provide equipment capable of providing a fine, light water fog mist.

Provide mechanically operated vibratory equipment capable of adequately consolidating the concrete. Provide immersion vibrators on the paving equipment at sufficiently close intervals to provide uniform vibration and consolidation of the concrete over the entire width and depth of the pavement and in accordance with the manufacturer's recommendations. Provide immersion vibrator units that operate at a frequency in air of at least 8,000 cycles per minute. Provide enough hand-operated immersion vibrators for timely and proper consolidation of the concrete along forms, at joints and in areas not covered by other vibratory equipment. Surface vibrators may be used to supplement equipment-mounted immersion vibrators. Provide tachometers to verify the proper operation of all vibrators.

For small or irregular areas or when approved, the paving equipment described in this Section is not required.

B. Forming Equipment.

1. **Pavement Forms.** Provide metal side forms of sufficient cross-section, strength, and rigidity to support the paving equipment and resist the impact and vibration of the operation without visible springing or settlement. Use forms that are free from detrimental kinks, bends, or warps that could affect ride quality or alignment. Provide flexible or curved metal or wood forms for curves of 100-ft. radius or less.
2. **Curb Forms.** Provide curb forms for separately placed curbs that are not slipformed that conform to the requirements of Item 529, "Concrete Curb, Gutter, and Combined Curb and Gutter."

C. Reinforcing Steel Inserting Equipment. Provide inserting equipment that accurately inserts and positions reinforcing steel in the plastic concrete parallel to the profile grade and horizontal alignment in accordance to plan details.

D. Texturing Equipment.

1. **Carpet Drag.** Provide a carpet drag mounted on a work bridge or a moveable support system. Provide a single piece of carpet of sufficient transverse length to span the full width of the pavement being placed and adjustable so that a sufficient longitudinal length of carpet is in contact with the concrete being placed to produce the desired texture. Obtain approval to vary the length and width of the carpet to accommodate specific applications. Use an artificial grass-type carpet having a molded polyethylene pile face with a blade length of 5/8 in. to 1 in., a minimum weight of 70 oz. per square yard, and a strong, durable, rot-resistant backing material bonded to the facing.
2. **Tining Equipment.** Provide a self-propelled transverse metal tine device equipped with 4-in. to 6-in. steel tines and with cross-section approximately 1/32 in. thick by 1/12 in. wide, spaced at 1 in., center-to-center. Hand-operated tining equipment that produces an equivalent texture may be used only on small or irregularly shaped areas or, when permitted, in emergencies due to equipment breakdown.

E. Curing Equipment. Provide a self-propelled machine for applying membrane curing compound using mechanically pressurized spraying equipment with atomizing nozzles. Provide equipment and controls that maintain the required uniform rate of application over the entire paving area. Provide curing equipment that is independent of all other equipment when production rates are such that the first application of membrane curing compound cannot be accomplished immediately after texturing and after free moisture has disappeared. Hand-operated pressurized spraying equipment with atomizing nozzles may only be used on small or irregular areas or, when permitted, in emergencies due to equipment breakdown.

F. Sawing Equipment. Provide power-driven concrete saws to saw the joints shown on the plans. Provide standby power-driven concrete saws during concrete sawing operations. Provide adequate illumination for nighttime sawing.

G. Grinding Equipment. When required, provide self-propelled powered grinding equipment that is specifically designed to smooth and texture concrete pavement using circular diamond blades. Provide equipment with automatic grade control capable of grinding at least a 3-ft. width longitudinally in each pass without damaging the concrete.

H. Testing Equipment. Provide testing equipment regardless of job-control testing responsibilities in accordance with Item 421, "Hydraulic Cement Concrete," unless otherwise shown in the plans or specified.

I. Coring Equipment. When required, provide coring equipment capable of extracting cores in accordance with the requirements of Tex-424-A.

J. Miscellaneous Equipment. Furnish both 10-ft. and 15-ft. steel or magnesium long-handled standard straightedges. Furnish enough work bridges, long enough to span the pavement, for finishing and inspection operations. Furnish date stencils to impress pavement placement dates into the fresh concrete, with numerals approximately 2 in. high by 1 in. wide by 1/4 in. deep.

360.4. Construction. Obtain approval for adjustments to plan grade-line to maintain thickness over minor subgrade or base high spots while maintaining clearances and drainage. Maintain subgrade or base in a smooth, clean, compacted condition in conformity with the required section and established grade until the pavement concrete is placed. Keep subgrade or base damp with water sufficiently in advance of placing pavement concrete. Adequately light the active work areas for all nighttime operations. Provide and maintain tools and materials to perform testing.

A. Paving and Quality Control Plan. Submit a paving and quality control plan for approval before beginning pavement construction operations. Include details of all operations in the concrete paving process, including longitudinal construction joint layout, sequencing, curing, lighting, early opening, leave-outs, sawing, inspection, testing, construction methods, other details and description of all equipment. List certified personnel performing the testing. Submit revisions to the paving and quality control plan for approval.

B. Job-Control Testing. Unless otherwise shown on the plans, perform all fresh and hardened concrete job-control testing at the specified frequency. Provide job-control testing personnel meeting the requirements of Item 421, "Hydraulic Cement Concrete." Provide and maintain testing equipment, including strength testing equipment at a location acceptable to the Engineer. Use of a commercial laboratory is acceptable. Maintain all testing equipment calibrated in accordance with pertinent test methods. Make strength-testing equipment available to the Engineer for verification testing.

Provide the Engineer the opportunity to witness all tests. The Engineer may require a retest if not given the opportunity to witness. Furnish a copy of all test results to the Engineer daily. Check the first few concrete loads for slump, air, and temperature on start-up production days to check for concrete conformance and consistency. Sample and prepare strength test specimens (2 specimens per test) on the first day of production and for each 3,000 sq. yd. or fraction thereof of concrete pavement thereafter. Prepare at least 1 set of strength-test specimens for each production day. Perform slump, air, and temperature tests each time strength specimens are made. Monitor concrete temperature to ensure that concrete is consistently within the temperature requirements. The Engineer will direct random job-control sampling and testing. Immediately investigate and take corrective action as approved if any Contractor test result, including tests performed for verification purposes, does not meet specification requirements.

When job-control testing by the Contractor is waived by the plans, the Engineer will perform the testing; however, this does not waive the Contractor's responsibility for providing materials and work in accordance with this Item.

1. **Job-Control Strength.** Unless otherwise shown on the plans or permitted by the Engineer, use 7-day job-control concrete strength testing in accordance with Tex-448-A or Tex-418-A.

   For 7-day job-control by flexural strength, use a flexural strength of 520 psi or a lower job-control strength value proven to meet a 28-day flexural strength of 680 psi as correlated in accordance

with Tex-427-A. For 7-day job-control by compressive strength, use a compressive strength of 3,200 psi or a lower job-control strength value proven to meet a 28-day compressive strength of 4,400 psi as correlated in accordance with Tex-427-A.

Job control of concrete strength may be correlated to an age other than 7 days in accordance with Tex-427-A when approved. Job-control strength of Class HES concrete is based on the required strength and time.

When a job-control concrete strength test value is more than 10% below the required job-control strength or when 3 consecutive job-control strength values fall below the required job-control strength, investigate the strength test procedures, the quality of materials, the concrete production operations, and other possible problem areas to determine the cause. Take necessary action to correct the problem, including redesign of the concrete mix if needed. The Engineer may suspend concrete paving if the Contractor is unable to identify, document, and correct the cause of low strength test values in a timely manner. If any job-control strength is more than 15% below the required job-control strength, the Engineer will evaluate the structural adequacy of the pavements. When directed, remove and replace pavements found to be structurally inadequate at no additional cost.

2. **Split-Sample Verification Testing.** Perform split-sample verification testing with the Engineer on random samples taken and split by the Engineer at a rate of at least 1 for every 10 job-control samples. The Engineer will evaluate the results of split-sample verification testing. Immediately investigate and take corrective action as approved when results of split-sample verification testing differ more than the allowable differences shown in Table 1, or when the average of 10 job-control strength results and the Engineer's split-sample strength result differ by more than 10%.

Table 1
Verification Testing Limits

Test Method	Allowable Differences
Temperature, Tex-422-A	2°F
Slump, Tex-415-A	1 in.
Air content, Tex-414-A or Tex-416-A	1%
Flexural strength, Tex-448-A	19%
Compressive strength, Tex-418-A	10%

C. Reinforcing Steel and Joint Assemblies. Accurately place and secure in position all reinforcing steel as shown on the plans. Place dowels at mid-depth of the pavement slab, parallel to the surface. Place dowels for transverse contraction joints parallel to the pavement edge. Tolerances for location and alignment of dowels will be shown on the plans. Stagger the longitudinal reinforcement splices to avoid having more than 1/3 of the splices within a 2-ft. longitudinal length of each lane of the pavement. Use multiple-piece tie bars or drill and epoxy grout tie bars at longitudinal construction joints. Verify that tie bars that are drilled and epoxied into concrete at longitudinal construction joints develop a pullout resistance equal to a minimum of 3/4 of the yield strength of the steel after 7 days. Test 15 bars using ASTM E 488, except that alternate approved equipment may be used. All 15 tested bars must meet the required pullout strength. If any of the test results do not meet the required minimum pullout strength, perform corrective measures to provide equivalent pullout resistance. Repair damage from testing. Acceptable corrective measures include but are not limited to installation of additional or longer tie bars.

1. **Manual Placement.** Secure reinforcing bars at alternate intersections with wire ties or locking support chairs. Tie all splices with wire.

2. **Mechanical Placement.** If mechanical placement of reinforcement results in steel misalignment or improper location, poor concrete consolidation, or other inadequacies, complete the work using manual methods.

D. Joints. Install joints as shown on the plans. Joint sealants are not required on concrete pavement that is to be overlaid with asphaltic materials. Clean and seal joints in accordance with Item 438, "Cleaning and Sealing Joints and Cracks (Rigid Pavement and Bridge Decks)." Repair excessive spalling of the joint saw groove using an approved method before installing the sealant. Seal all joints before opening the pavement to all traffic. When placing of concrete is stopped, install a rigid transverse bulkhead, accurately notched for the reinforcing steel and shaped accurately to the cross-section of the pavement.

1. **Placing Reinforcement at Joints.** Where the plans require an assembly of parts at pavement joints, complete and place the assembly at the required location and elevation with all parts rigidly secured in the required position. Accurately notch joint materials for the reinforcing steel.
2. **Transverse Construction Joints.**
   a. **Continuously Reinforced Concrete Pavement (CRCP).** Install additional longitudinal reinforcement through the bulkhead when shown on the plans. Protect the reinforcing steel immediately beyond the construction joint from damage, vibration, and impact.
   b. **Concrete Pavement Contraction Design (CPCD).** When the placing of concrete is intentionally stopped, install and rigidly secure a complete joint assembly and bulkhead in the planned transverse contraction joint location. When the placing of concrete is unintentionally stopped, install a transverse construction joint either at a planned transverse contraction joint location or mid-slab between planned transverse contraction joints. For mid-slab construction joints, install tie bars of the size and spacing used in the longitudinal joints.
   c. **Curb Joints.** Provide joints in the curb of the same type and location as the adjacent pavement. Use expansion joint material of the same thickness, type, and quality required for the pavement and of the section shown for the curb. Extend expansion joints through the curb. Construct curb joints at all transverse pavement joints. For non-monolithic curbs, place reinforcing steel into the plastic concrete pavement as shown on the plans unless otherwise approved. Form or saw the weakened plane joint across the full width of concrete pavement and through the monolithic curbs. Construct curb joints in accordance with Item 529, "Concrete Curb, Gutter, and Combined Curb and Gutter."

E. Placing and Removing Forms. Use clean and oiled forms. Secure forms on a base or firm subgrade that is accurately graded and that provides stable support without deflection and movement by form riding equipment. Pin every form at least at the middle and near each end. Tightly join and key form sections together to prevent relative displacement.

Set side forms far enough in advance of concrete placement to permit inspection. Check conformity of the grade, alignment, and stability of forms immediately before placing concrete, and make all necessary corrections. Use a straightedge or other approved method to test the top of forms to ensure that the ride quality requirements for the completed pavement will be met. Stop paving operations if forms settle or deflect more than 1/8 in. under finishing operations. Reset forms to line and grade, and refinish the concrete surface to correct grade.

Avoid damage to the edge of the pavement when removing forms. Repair damage resulting from form removal and honeycombed areas with a mortar mix within 24 hr. after form removal unless otherwise approved. Clean joint face and repair honeycombed or damaged areas within 24 hr. after a bulkhead for a transverse construction joint has been removed unless otherwise approved. When forms are removed before 72 hr. after concrete placement, promptly apply membrane curing compound to the edge of the concrete pavement.

Forms that are not the same depth as the pavement but are within 2 in. of that depth are permitted if the subbase is trenched or the full width and length of the form base is supported with a firm material to produce the required pavement thickness. Promptly repair the form trench after use. Use flexible or curved wood or metal forms for curves of 100-ft. radius or less.

F. Concrete Delivery. Clean delivery equipment as necessary to prevent accumulation of old concrete before loading fresh concrete. Use agitated delivery equipment for concrete designed to have a slump of more than 5 in. Segregated concrete is subject to rejection. Place agitated concrete within 60 min. after batching. Place non-agitated concrete within 45 min. after batching. In hot weather or under conditions causing quick setting of the concrete, times may be reduced by the Engineer. Time limitations may be extended if the Contractor can demonstrate that the concrete can be properly placed, consolidated, and finished without the use of additional water.

G. Concrete Placement. Do not allow the pavement edge to deviate from the established paving line by more than 1/2 in. at any point. Place the concrete as near as possible to its final location, and minimize segregation and rehandling. Where hand spreading is necessary, distribute concrete using shovels. Do not use rakes or vibrators to distribute concrete.

1. **Pavement.** Consolidate all concrete by approved mechanical vibrators operated on the front of the paving equipment. Use immersion-type vibrators that simultaneously consolidate the full width of the placement when machine finishing. Keep vibrators from dislodging reinforcement. Use hand-operated vibrators to consolidate concrete in areas not accessible to the machine-mounted vibrators. Do not operate machine-mounted vibrators while the paving equipment is stationary. Vibrator operations are subject to review.
2. **Date Imprinting.** Imprint dates in the fresh concrete indicating the date of the concrete placement. Make impressions approximately 1 ft. from the outside longitudinal construction joint or edge of pavement and approximately 1 ft. from the transverse construction joint at the beginning of the placement day. Orient the impressions to be read from the outside shoulder in the direction of final traffic. Impress date in DD-MM-YY format. Imprinting of the Contractor name or logo in similar size characters to the date is allowed.
3. **Curbs.** Where curbs are placed separately, conform to the requirements of Item 529, "Concrete Curb, Gutter, and Combined Curb and Gutter."
4. **Temperature Restrictions.** Place concrete that is between 40°F and 95°F when measured in accordance with Tex-422-A at the time of discharge, except that concrete may be used if it was already in transit when the temperature was found to exceed the allowable maximum. Take immediate corrective action or cease concrete production when the concrete temperature exceeds 95°F.

   Do not place concrete when the ambient temperature in the shade is below 40°F and falling unless approved. Concrete may be placed when the ambient temperature in the shade is above 35°F and rising or above 40°F. When temperatures warrant protection against freezing, protect the pavement with an approved insulating material capable of protecting the concrete for the specified curing period. Submit for approval proposed measures to protect the concrete from anticipated freezing weather for the first 72 hr. after placement. Repair or replace all concrete damaged by freezing.

H. Spreading and Finishing. Finish all concrete pavement with approved self-propelled equipment. Use power-driven spreaders, power-driven vibrators, power-driven strike-off, and screed, or approved alternate equipment. Use the transverse finishing equipment to compact and strike off the concrete to the required section and grade without surface voids. Use float equipment for final finishing. Use concrete with a consistency that allows completion of all finishing operations without addition of water to the surface. Use the minimal amount of water fog mist necessary to maintain a moist surface. Reduce fogging if float or straightedge operations result in excess slurry.

1. **Finished Surface.** Perform sufficient checks with long-handled 10-ft. and 15-ft. straightedges on the plastic concrete to ensure that the final surface is within the tolerances specified in Surface Test A in Item 585, "Ride Quality for Pavement Surfaces." Check with the straightedge parallel to the centerline.
2. **Maintenance of Surface Moisture.** Prevent surface drying of the pavement before application of the curing system. Accomplish this by fog applications of evaporation retardant on the pavement surface. Apply evaporation retardant at the rate recommended by the manufacturer. Reapply the evaporation retardant as needed to maintain the concrete surface in a moist condition until curing system is applied. Do not use evaporation retardant as a finishing aid. Failure to take acceptable precautions to prevent surface drying of the pavement will be cause for shut down of pavement operations.
3. **Surface Texturing.** Perform surface texturing using a combination of a carpet drag and metal tining. Complete final texturing before the concrete has attained its initial set. Draw the carpet drag longitudinally along the pavement surface with the carpet contact surface area adjusted to provide a satisfactory coarsely textured surface.

   A metal-tine texture finish is required unless otherwise shown on the plans. Provide the metal-tine finish immediately after the concrete surface has set enough for consistent tining. Operate the metal-tine device to obtain grooves spaced at 1 in., approximately 3/16 in. deep, with a minimum depth of 1/8 in., and approximately 1/12 in. wide. Do not overlap a previously tined area. Use manual methods for achieving similar results on ramps and other irregular sections of pavements.

Repair damage to the edge of the slab and joints immediately after texturing. Do not tine pavement that will be overlaid.

4. **Small or Irregular Placements.** Where machine placements and finishing of concrete pavement are not practical, use hand equipment and procedures that produce a consolidated and finished pavement section to the line and grade.

5. **Emergency Procedures.** Use hand-operated equipment for applying texture, evaporation retardant, and cure in the event of equipment breakdown.

I. Curing. Keep the concrete pavement surface from drying by water fogging until the curing material has been applied. Maintain and promptly repair damage to curing materials on exposed surfaces of concrete pavement continuously for at least 3 curing days. A curing day is defined as a 24-hr. period when either the temperature taken in the shade away from artificial heat is above 50°F for at least 19 hr. or when the surface temperature of the concrete is maintained above 40°F for 24 hr. Curing begins when the concrete curing system has been applied. Stop concrete paving if curing compound is not being applied promptly and maintained adequately. Other methods of curing in accordance with Item 420, "Concrete Structures," may be used when specified or approved.

1. **Membrane Curing.** After texturing and immediately after the free surface moisture has disappeared, spray the concrete surface uniformly with 2 coats of membrane curing compound at an individual application rate of not more than 180 sq. ft. per gallon. Apply the first coat within 10 min. after completing texturing operations. Apply the second coat within 30 min. after completing texturing operations.

   Before and during application, maintain curing compounds in a uniformly agitated condition, free of settlement. Do not thin or dilute the curing compound.

   Where the coating shows discontinuities or other defects or if rain falls on the newly coated surface before the film has dried enough to resist damage, apply additional compound at the same rate of coverage to correct the damage. Ensure that the curing compound coats the sides of the tining grooves.

2. **Asphalt Curing.** When an asphaltic concrete overlay is required, apply a uniform coating of asphalt curing at a rate of 90 to 180 sq. ft. per gallon as required. Apply curing immediately after texturing and just after the free moisture (sheen) has disappeared. Obtain approval to add water to the emulsion to improve spray distribution. Maintain the asphalt application rate when using diluted emulsions. Maintain the emulsion in a mixed condition during application.

3. **Curing Class HES Concrete.** For all Class HES concrete pavement, provide membrane curing in accordance with Section 360.4.I.1, "Membrane Curing," followed promptly by water curing until opening strength is achieved but not less than 24 hr.

J. Sawing Joints. Saw joints to the depth shown on the plans as soon as sawing can be accomplished without damage to the pavement regardless of time of day or weather conditions. Some minor raveling of the saw cut is acceptable. Use a chalk line, string line, sawing template, or other approved method to provide a true joint alignment. Provide enough saws to match the paving production rate to ensure sawing completion at the earliest possible time to avoid uncontrolled cracking. Reduce paving production if necessary to ensure timely sawing of joints. Promptly restore membrane cure damaged within the first 72 hr. of curing.

K. Protection of Pavement and Opening to Traffic. Testing for early opening is the responsibility of the Contractor regardless of job-control testing responsibilities unless otherwise shown in the plans or directed. Testing result interpretation for opening to traffic is subject to the approval of the Engineer.

1. **Protection of Pavement.** Erect and maintain barricades and other standard and approved devices that will exclude all vehicles and equipment from the newly placed pavement for the periods specified. Before opening to traffic, protect the pavement from damage due to crossings using approved methods. Where a detour is not readily available or economically feasible, an occasional crossing of the roadway with overweight equipment may be permitted for relocating equipment only but not for hauling material. When an occasional crossing of overweight equipment is permitted, temporary matting or other approved methods may be required.

Maintain an adequate supply of sheeting or other material to cover and protect fresh concrete surface from weather damage. Apply as needed to protect the pavement surface from weather.

2. **Opening Pavement to All Traffic.** Pavement that is 7 days old may be opened to all traffic. Before opening to traffic, clean pavement, place stable material against the pavement edges, seal joints, and perform all other traffic safety related work.

3. **Opening Pavement to Construction Equipment.** Unless otherwise shown on the plans, concrete pavement may be opened early to concrete paving equipment and related delivery equipment after the concrete is at least 48 hr. old and opening strength has been demonstrated in accordance with Section 360.4.K.4, "Early Opening to All Traffic," before curing is complete. Keep delivery equipment at least 2 ft. from the edge of the concrete pavement. Keep tracks of the paving equipment at least 1 ft. from the pavement edge. Protect textured surfaces from the paving equipment. Restore damaged membrane curing as soon as possible. Repair pavement damaged by paving or delivery equipment before opening to all traffic.

4. **Early Opening to All Traffic.** Concrete pavement may be opened after curing is complete and the concrete has attained a flexural strength of 450 psi or a compressive strength of 2,800 psi, except that pavement using Class HES concrete may be opened after 24 hr. if the specified strength is achieved.

   a. **Strength Testing.** Test concrete specimens cured under the same conditions as the portion of the pavement involved.

   b. **Maturity Method.** Unless otherwise shown on the plans, the maturity method, Tex-426-A, may be used to estimate concrete strength for early opening pavement to traffic. Install at least 2 maturity thermocouples for each day's placement in areas where the maturity method will be used for early opening. Thermocouples, when used, will be installed near the days final placement for areas being evaluated for early opening. Use test specimens to verify the strength–maturity relationship in accordance with Tex-426-A, starting with the first day's placement corresponding to the early opening pavement section.

      After the first day, verify the strength–maturity relationship at least every 10 days of production. Establish a new strength–maturity relationship when the strength specimens deviate more than 10% from the maturity-estimated strengths. Suspend use of the maturity method for opening pavements to traffic when the strength–maturity relationship deviates by more than 10% until a new strength–maturity relationship is established.

      When the maturity method is used intermittently or for only specific areas, the frequency of verification will be as determined by the Engineer.

5. **Emergency Opening to Traffic.** Under emergency conditions, when the pavement is at least 72 hr. old, open the pavement to traffic when directed in writing. Remove all obstructing materials, place stable material against the pavement edges, and perform other work involved in providing for the safety of traffic as required for emergency opening.

L. **Pavement Thickness.** The Engineer will check the thickness in accordance with Tex-423-A unless other methods are shown on the plans. The Engineer will perform 1 thickness test consisting of 1 reading at approximately the center of each lane every 500 ft. or fraction thereof. Core where directed in accordance with Tex-424-A to verify deficiencies of more than 0.2 in. from plan thickness and to determine the limits of deficiencies of more than 0.75 in. from plan thickness. Fill core holes using a concrete mixture and method approved by the Engineer.

1. **Thickness Deficiencies Greater than 0.2 in.** When any depth test measured in accordance with Tex-423-A is deficient by more than 0.2 in. from the plan thickness, take one 4-in. diameter core at that location to verify the measurement.

   If the core is deficient by more than 0.2 in. but not by more than 0.75 in. from the plan thickness, take 2 additional cores from the unit (as defined in Section 360.4.L.3, "Pavement Units for Payment Adjustment") at intervals of at least 150 ft. and at locations selected by the Engineer, and determine the thickness of the unit for payment purposes by averaging the length of the 3 cores. In calculations of the average thickness of this unit of pavement, measurements in excess of the specified thickness by more than 0.2 in. will be considered as the specified thickness plus 0.2 in.

2. **Thickness Deficiencies Greater than 0.75 in.** If a core is deficient by more than 0.75 in., take additional cores at 10 ft. intervals in each direction parallel to the centerline to determine the boundary of the deficient area. The Engineer will evaluate any area of pavement found deficient in thickness by more than 0.75 in. but not more than 1 in. As directed, remove and replace the deficient areas without additional compensation or retain deficient areas without compensation. Remove and replace any area of pavement found deficient in thickness by more than 1 in. without additional compensation.

3. **Pavement Units for Payment Adjustment.** Limits for applying a payment adjustment for deficient pavement thickness from 0.20 in. to not more than 0.75 in. are 500 ft. of pavement in each lane. Lane width will be as shown on typical sections and pavement design standards.

   For greater than 0.75 in. deficient thickness, the limits for applying zero payment or requiring removal will be defined by coring or equivalent nondestructive means as determined by the Engineer. The remaining portion of the unit determined to be less than 0.75 in. deficient will be subject to the payment adjustment based on the average core thickness at each end of the 10 ft. interval investigation as determined by the Engineer.

   Shoulders will be measured for thickness unless otherwise shown on the plans. Shoulders 6 ft. wide or wider will be considered as lanes. Shoulders less than 6 ft. wide will be considered part of the adjacent lane.

   Limits for applying payment adjustment for deficient pavement thickness for ramps, widenings, acceleration and deceleration lanes, and other miscellaneous areas are 500 ft. in length. Areas less than 500 ft. in length will be individually evaluated for payment adjustment based on the plan area.

M. Ride Quality. Unless otherwise shown on the plans, measure ride quality in accordance with Item 585, "Ride Quality for Pavement Surfaces."

360.5. Measurement. This Item will be measured as follows:

A. Concrete Pavement. Concrete pavement will be measured by the square yard of surface area in place. The surface area includes the portion of the pavement slab extending beneath the curb.

B. Curb. Curb on concrete pavement will be measured by the foot in place.

360.6. Payment. These prices are full compensation for materials, equipment, labor, tools, and incidentals.

A. Concrete Pavement. The work performed and materials furnished in accordance with this Item and measured as provided under "Measurement" will be paid for at the adjusted unit price bid for "Concrete Pavement" of the type and depth specified as adjusted in accordance with Section 360.6.B, "Deficient Thickness Adjustment."

B. Deficient Thickness Adjustment. Where the average thickness of pavement is deficient in thickness by more than 0.2 in. but not more than 0.75 in., payment will be made using the adjustment factor as specified in Table 2 applied to the bid price for the deficient area for each unit as defined under Section 360.4.L.3, "Pavement Units for Payment Adjustment."

Table 2
Deficient Thickness Price Adjustment Factor

Deficiency in Thickness Determined by Cores (in.)	Proportional Part of Contract Price Allowed (adjustment factor)
Not deficient	1.00
Over 0.00 through 0.20	1.00
Over 0.20 through 0.30	0.80
Over 0.30 through 0.40	0.72
Over 0.40 through 0.50	0.68
Over 0.50 through 0.75	0.57

C. Curb. Work performed and furnished in accordance with this Item and measured as provided under "Measurement" will be paid for at the unit price bid for "Curb" of the type specified.

ITEM 400

EXCAVATION AND BACKFILL FOR STRUCTURES

400.1. Description. Excavate for placement and construction of structures and backfill structures. Cut and restore pavement.

400.2. Materials. Use materials that meet the requirements of the following Items:

- Item 401, "Flowable Backfill"
- Item 421, "Hydraulic Cement Concrete"
- DMS-4600, "Hydraulic Cement"

400.3. Construction.

A. Excavation.

1. General. Excavate to the lines and grades shown on the plans or as directed. Provide slopes, benching, sheeting, bracing, pumping, and bailing as necessary to maintain the stability and safety of excavations up to 5 ft. deep. Excavation protection for excavations deeper than 5 ft. are governed by Item 402, "Trench Excavation Protection," and Item 403, "Temporary Special Shoring." Use satisfactory excavated material as backfill or as embankment fill in accordance with Item 132, "Embankment." Dispose of material not incorporated into the final project off the right of way in accordance with federal, state, and local regulations.

When excavating for installation of structures across private property or beyond the limits of the embankment, keep any topsoil removed separate, and replace it, as nearly as feasible, in its original position. Restore the area to an acceptable condition.

Excavate drilled shafts in accordance with Item 416, "Drilled Shaft Foundations."

a. Obstructions. Remove obstructions to the proposed construction, including trees and other vegetation, debris, and structures, over the width of the excavation to a depth of 1 ft. below the bottom of excavation. If abandoned storm drains, sewers, or other drainage systems are encountered, remove as required to clear the new structure, and plug in an approved manner. After removing obstructions, restore the bottom of the excavation to grade by backfilling in accordance with this Item. Dispose of surplus materials in accordance with federal, state, and local regulations.

b. Excavation in Streets. When structures are installed in streets, highways, or other paved areas, cut pavement and base to neat lines. Restore pavement structure after completion of excavation and backfilling.

Maintain and control traffic in accordance with the approved traffic control plan and the TMUTCD.

c. Utilities. Comply with the requirements of Article 7.12, "Responsibility for Damage Claims." Conduct work with minimum disturbance of existing utilities, and coordinate work in or near utilities with the utility owners. Inform utility owners sufficiently before work begins to allow them time to identify, locate, reroute, or make other adjustments to utility lines.

Avoid cutting or damaging underground utility lines that are to remain in place. If damage occurs, promptly notify the utility company. If an active sanitary sewer line is damaged during excavation, provide temporary flumes across the excavation while open, and restore the lines when backfilling has progressed to the original bedding lines of the cut sewer.

d. De-Watering. Do not construct or place structures in the presence of water unless approved. Place precast members, pipe, and concrete only on a dry, firm surface. Remove water by bailing, pumping, well-point installation, deep wells, underdrains, or other approved method.

If structures are approved for placement in the presence of water, remove standing water in a manner that does not allow water movement through or alongside concrete being placed. Do not pump or bail while placing structural concrete or for a period of at least 36 hr. thereafter

unless from a suitable sump separated from the concrete work. Pump or bail during placement of seal concrete only to the extent necessary to maintain a static head of water within the cofferdam. Do not pump or bail to de-water inside a sealed cofferdam until the seal has aged at least 36 hr.

If the bottom of an excavation cannot be de-watered to the point that the subgrade is free of mud or it is difficult to keep reinforcing steel clean, place a stabilizing material in the bottom of the excavation. Stabilizing material may be flexible base, cement-stabilized base or backfill, lean concrete, or other approved material. If lean concrete is used, provide concrete with at least 275 lb. of cement per cubic yard, and place to a minimum depth of 3 in. Stabilizing material placed for the convenience of the Contractor will be at the Contractor's expense.

2. **Bridge Foundations and Retaining Walls.** Do not disturb material below the bottom of footing grade. Do not backfill to compensate for excavation that has extended below grade. If excavation occurs below the proposed footing grade, fill the area with concrete at the time the footing is placed. The additional concrete placed will be at the Contractor's expense.

   If requested, take cores to determine the character of the supporting materials. Provide an intact sample adequate to judge the character of the founding material. Take these cores when the excavation is close to completion. Cores should be approximately 5 ft. deeper than the proposed founding grade.

   If the founding stratum is rock or other hard material, remove loose material, clean, and cut to a firm surface that is level, stepped, or serrated, as directed. Clean out soft seams, and fill with concrete at the time the footing is placed.

   If the material at the footing grade of a retaining wall, bridge bent, or pier is a mixture of compressible and incompressible material, do not place the foundation until the Engineer has inspected the excavation and authorized changes have been made to provide a uniform bearing condition.

3. **Cofferdams.** The term "cofferdam" designates any temporary or removable structure constructed to hold surrounding earth, water, or both out of the excavation whether the structure is formed of soil, timber, steel, concrete, or a combination of these. Cofferdams may require the use of pumping wells or well points for de-watering.

   For sheet-pile or other types of cofferdams requiring structural members, submit details and design calculations bearing the seal of a licensed professional engineer for review before constructing the cofferdam. The Department reserves the right to reject designs. Design structural systems to comply with the AASHTO *Standard Specifications for Highway Bridges* or AASHTO *LRFD Bridge Design Specifications*. Interior dimensions of cofferdams must provide sufficient clearance for the construction, inspection, and removal of required forms and, if necessary, sufficient room to allow pumping outside the forms. In general, extend sheet-pile cofferdams well below the bottom of the footings, and make concrete seals as well braced and watertight as practicable.

   For foundation seals, use Class E concrete unless otherwise specified. Place concrete foundation seals in accordance with Item 420, "Concrete Structures." Seals placed for the convenience of the Contractor will be at the Contractor's expense.

   When the Engineer judges it to be impractical to de-water inside a cofferdam and a concrete seal is to be placed around piling driven within the cofferdam, make the excavation deep enough to allow for swelling of the material at the base of the excavation during pile-driving operations. After driving the piling, remove swelling material to the bottom of the seal grade. Where it is possible to de-water inside the cofferdam without placing a seal, remove the foundation material to exact footing grades after driving piling. Do not backfill a foundation to compensate for excavation that has been extended below grade; fill such areas below grade with concrete at the time the seals or footings are placed.

   Unless otherwise provided, remove cofferdams after completing the substructure without disturbing or damaging the structure.

4. **Culverts and Storm Drains.** When the design requires special bedding conditions for culverts or storm drains, an excavation diagram will be shown on the plans. Do not exceed these limits of excavation.

   Unless otherwise shown on the plans, construct pipe structures in an open cut with vertical sides extending to a point 1 ft. above the pipe. When site conditions or the plans do not prohibit sloping the cut, the excavation may be stepped or laid back to a stable slope beginning 1 ft. above the pipe. Maintain the stability of the excavation throughout the construction period.

   For pipe to be installed in fill above natural ground, construct the embankment to an elevation at least 1 ft. above the top of the pipe, and then excavate for the pipe.

   a. **Unstable Material.** When unstable soil is encountered at established footing grade, remove the material to a depth of no more than 2 ft. below the grade of the structure unless the Engineer authorizes additional depth. Replace soil removed with stable material in uniform layers at most 8 in. deep (loose measurement). Each layer must have enough moisture to be compacted by rolling or tamping as required to provide a stable foundation for the structure.

      When it is not feasible to construct a stable foundation as outlined above, use special materials such as flexible base, cement-stabilized base, cement-stabilized backfill, or other approved material.

   b. **Incompressible Material.** If rock, part rock, or other incompressible material is encountered at established footing grade while placing prefabricated elements, remove the incompressible material to 6 in. below the footing grade, backfill with an approved compressible material, and compact in accordance with Section 400.3.C, “Backfill.”

B. **Shaping and Bedding.** For precast box sections, place at least 2 in. of fine granular material on the base of the excavation before placing the box sections. For pipe installations, use bedding as shown in Figure 1. Use Class C bedding unless otherwise shown on the plans. The Engineer may require the use of a template to secure reasonably accurate shaping of the foundation material. Where cement-stabilized backfill is indicated on the plans, undercut the excavation at least 4 in. and backfill with stabilized material to support the pipe or box at the required grade.

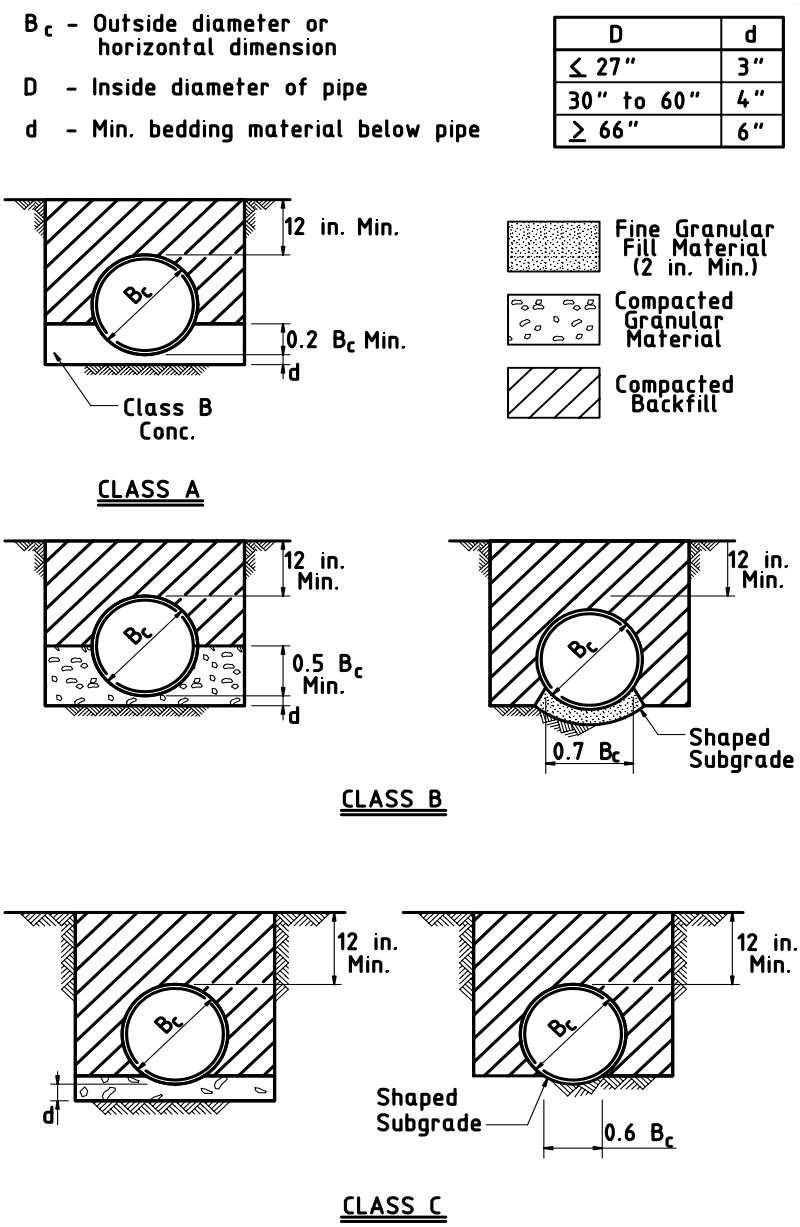

Figure 1
Bedding diagrams.

C. Backfill.

1. **General.** As soon as practical, backfill the excavation after placement of the permanent structure. Use backfill free from stones large enough to interfere with compaction; large or frozen lumps that will not break down readily under compaction; and wood or other extraneous material. Obtain backfill material from excavation or from other sources.

   In areas not supporting a completed roadbed, retaining wall, or embankment, place backfill in layers at most 10 in. deep (loose measurement). In areas supporting a portion of a roadbed, retaining wall, or embankment, place backfill in uniform layers at most 8 in. deep (loose measurement). Compact each layer to meet the density requirements of the roadbed, retaining wall, embankment material, or as shown on the plans.

Bring each layer of backfill material to the moisture content needed to obtain the required density. Use mechanical tamps or rammers to compact the backfill. Rollers may be used to compact backfill if feasible.

Cohesionless materials such as sand may be used for backfilling. Compact cohesionless materials using vibratory equipment, water-ponding, or a combination of both.

2. **Bridge Foundations, Retaining Walls, and Box Culverts.** Do not place backfill against the structure until the concrete has reached the design strength required in Item 421, "Hydraulic Cement Concrete."

   Backfill retaining walls with material meeting the requirements of Item 423, "Retaining Walls." Backfill around bridge foundations and culverts using material with no particles more than 4 in. in greatest dimension and with a gradation that permits thorough compaction. Rock or gravel mixed with soil may be used if the percentage of fines is sufficient to fill all voids and ensure a uniform and thoroughly compacted mass of proper density.

   Where backfill material is being placed too close to the structure to permit compaction with blading and rolling equipment, use mechanical tamps and rammers to avoid damage to the structure.

   Avoid wedging action of backfill against structures. To prevent such action, step or serrate slopes bounding the excavation. Place backfill uniformly around bridge foundations. Place backfill along both sides of culverts equally and in uniform layers.

   The Engineer may require backfilling of structures excavated into hard, erosion-resistant material, and subject to erosive forces, with stone or lean concrete.

   Box culverts may be opened to traffic as soon as sufficient backfill and embankment has been placed over the top to protect culverts against damage from heavy construction equipment. Repair damage to culvert caused by construction traffic at no additional expense to the Department.

3. **Pipe.** After installing bedding and pipe as required, bring backfill material to the proper moisture condition and place it equally along both sides of the pipe in uniform layers at most 8 in. deep (loose measurement). Compact each lift mechanically. Thoroughly compact materials placed under the haunches of the pipe to prevent damage or displacement of the pipe. Continue to place backfill in this manner to the top-of-pipe elevation. Place and compact backfill above the top of the pipe in accordance with Section 400.3.C.1, "General."

   The Engineer may reject backfill material containing more than 20% by weight of material retained on a 3-in. sieve; with large lumps not easily broken down; or that cannot be spread in loose layers. Material excavated by a trenching machine will generally meet the requirements of this Section as long as large stones are not present.

   Where pipe extends beyond the toe of slope of the embankment and the depth of cover provided by backfill to the original ground level is less than the minimum required by the specifications for the type of pipe involved, place and compact additional material until the minimum cover has been provided.

4. **Cement-Stabilized Backfill.** When shown on the plans, backfill the excavation to the elevations shown with cement-stabilized backfill. Use cement-stabilized backfill that contains aggregate, water, and a minimum of 7% hydraulic cement based on the dry weight of the aggregate, in accordance with Tex-120-E. Use clean sand as aggregate for cement-stabilized backfill unless otherwise shown on the plans. Use only approved aggregate.

   Place cement-stabilized backfill equally along the sides of structures to prevent strain on or displacement of the structure. Fill voids when placing cement-stabilized backfill. Use hand operated tampers if necessary to fill voids.

5. **Flowable Backfill.** When shown on the plans, backfill the excavation with flowable backfill to the elevations shown. Prevent the structure from being displaced during the placement of the flowable fill, and prevent flowable fill from entering culverts and drainage structures.

400.4. Measurement. This is a plans quantity measurement Item. The quantity to be paid is the quantity shown in the proposal, unless modified by Article 9.2, "Plans Quantity Measurement." Additional measurements or calculations will be made if adjustments of quantities are required.

A. Structural Excavation. Unless shown on the plans as a pay item, structural excavation quantities shown are for information purposes only.

When structural excavation is specified as a pay item, structural excavation for pipe headwalls, inlets, manholes, culvert or storm drain extensions less than 15 ft. long, bridge abutments, retaining walls, and side road and private entrance pipe culverts will not be measured. No allowance will be made for variance from plans quantity incurred by an alternate bid.

When specified as a pay item, structural excavation will be measured by the cubic yard as computed by the average end areas method. Excavation diagrams on the plans take precedence over the provisions of this Article.

1. Boundaries of Measurement.

a. Pipe.

(1) Pipe up to 42 Inches. For pipe 42 in. or less in nominal or equivalent diameter, no material outside of vertical planes 1 ft. beyond and parallel to the horizontal projection of the outside surfaces of the pipe will be included.

(2) Pipe Larger than 42 Inches. For pipes larger than 42-in. nominal or equivalent diameter, no material outside of vertical planes located 2 ft. beyond and parallel to the horizontal projection of the outside surfaces of the pipe will be included.

Quantities for excavation in fill above natural ground include 1 ft. above the top of the pipe regardless of the height of completed fill. Excavation for pipe will be measured between the extreme ends of the completed structure including end appurtenances as shown on the plans and from centerline to centerline of inlets, manholes, etc.

b. Structural Plate Structures. No material outside of vertical planes 3 ft. beyond and parallel to the horizontal projection of the outside surfaces of the structure will be included. When the quality of the existing soil or embankment is less than that of the proposed backfill material, the limits of measurement will be extended to vertical planes located 1/2 of the span beyond the horizontal projection of the outside surfaces of the structure.

c. Footings, Walls, Boxes, and Other Excavation. No material outside of vertical planes 1 ft. beyond and parallel to the edges of the footings or outside walls will be included whether or not a cofferdam or shoring is used. When plans provide the option of cast-in-place or precast boxes, measurement will be based on the cast-in-place option.

Where excavation in addition to that allowed for the footings is required for other portions of the structure, measurement for the additional excavation will be limited laterally by vertical planes 1 ft. beyond the face of the member and parallel to it, and vertically to a depth of 1 ft. below the bottom of the member.

d. Excavation near Roadways and Channels. At structure sites other than culverts and pipe excavations, the measurement of structural excavation will include only material below or outside the limits of the completed road or channel excavation. Roadway and channel excavation will be paid under Item 110, "Excavation." For culverts except side road and private entrance culverts, excavation within the limits of the structure and below or outside the limits of the completed roadway excavation will be measured as structural excavation.

2. Falsework. No measurement will be made for excavation necessary for placing forms or falsework that exceeds the limits given in Section 400.4.B.1, "Boundaries of Measurement."

3. Swelling. Measurement will not include materials removed below footing grades to compensate for anticipated swelling due to pile driving, nor will it include material required to be removed due to swelling beyond the specified limits during pile driving operations.

4. Cave-ins. Measurement will not include additional volume caused by slips, slides, cave-ins, silting, or fill material resulting from the action of the elements or the Contractor's operation.

5. **Undercut.** Where rock or other incompressible or unstable material is undercut to provide a suitable foundation for pipe or box sections, such material below grade directed to be removed will be measured for payment.

6. **Grade Change.** Additional measurement will be made of the volume of excavation involved in the lowering or raising of the elevation of a footing, foundation, or structure unit, when such grade change is authorized.

B. Cement-Stabilized Backfill. Cement-stabilized backfill will be measured by the cubic yard as shown on the plans.

C. Cutting and Restoring Pavement. Cutting and restoring pavement will be measured by the square yard as shown on the plans. Excavation below pavement or base will be measured as structural excavation of the pertinent type.

400.5. Payment.

A. Structural Excavation. Unless specified as a pay item, structural excavation and backfill performed and material furnished in accordance with this Item will not be paid for directly but are subsidiary to pertinent Items.

When structural excavation is specified as a pay item, the excavation and backfill work performed and materials furnished will be paid for at the unit price bid for "Structural Excavation," "Structural Excavation (Box)," "Structural Excavation (Pipe)," and "Structural Excavation (Bridge)." This price includes concrete to compensate for excavation that has extended below grade for bridge foundations and retaining walls, and backfilling and compacting areas that were removed as part of structural excavation.

Cofferdams or other measures necessary for supporting excavations less than 5 ft. deep will not be measured or paid for directly but will be subsidiary to the Contract.

Foundation seal concrete for cofferdams, when required by the Engineer, will be paid for as provided in the pertinent Items. If no direct method of payment is provided in the Contract, the work will be measured and paid for in accordance with Article 9.4, "Payment for Extra Work." Seal placed for the convenience of the Contractor will not be paid for.

Unless otherwise provided, stone or lean concrete backfill around structures as provided for in Section 400.3.C.2, "Bridge Foundations, Retaining Walls, and Culverts," will be measured and paid for as extra work in accordance with Article 9.4.

When structural excavation is specified as a pay item, a partial payment of 50% of the bid price will be made for structural excavation completed to the satisfaction of the Engineer but not backfilled. The remaining amount will be paid upon completion of backfilling. When the Contractor elects to excavate beyond plan requirements, no measurement will be made of the additional volume.

B. Removal and Replacement of Unsuitable or Incompressible Material. Removal and replacement of material will be paid for if directed. Removal and replacement of material or placement of special material made necessary by the softening of founding material due to the Contractor's sequence of work or operation, will be at the Contractor's expense. Special material used or additional excavation made for the Contractor's convenience will not be paid for.

1. **Structural Excavation as a Pay Item.** Where special materials are not required or specified, payment for the removal and replacement of unstable or incompressible material will be made at a price equal to 200% of the unit price bid per cubic yard for Structural Excavation. When the Contractor elects to remove and replace material deeper than directed, no measurement will be made on that portion below the directed elevation. This price is full compensation for removing the unstable or incompressible material; furnishing, hauling, placing, and compacting suitable replacement material; and equipment, labor, tools, and incidentals.

   When the plans specify or when the Engineer directs the use of special materials such as flexible base, cement-stabilized base, cement-stabilized backfill, or other special material, payment for excavation below footing grades will be made at the unit price bid for Structural Excavation. Payment for furnishing, hauling, placing, and compacting the flexible base, cement-stabilized base, cement-stabilized backfill, or other special materials will be made at the unit price bid for

these items in the Contract, or, if the required material is not a bid item, in accordance with Article 9.4, "Payment for Extra Work."

2. **Structural Excavation Not a Pay Item.** Where special materials for backfill are not required or specified, payment for the authorized removal and replacement of unstable or incompressible material will be measured and paid for at $15 per cubic yard of material removed. This price is full compensation for removing the unstable or incompressible material; furnishing, hauling, placing, and compacting suitable replacement material; and equipment, labor, tools, and incidentals.

   When the plans specify or when the Engineer directs the use of special materials such as flexible base, cement-stabilized base, cement-stabilized backfill, or other special material, excavation below the footing grades will be paid for at $10 per cubic yard. Payment for furnishing, hauling, placing, and compacting the flexible base, cement-stabilized base, cement-stabilized backfill, or other special materials will be made at the unit price bid for these Items, or, if the required material is not a bid Item, in accordance with Article 9.4, "Payment for Extra Work."

C. Lowering of a Structure Foundation. If the Engineer requires a structure foundation to be lowered to an elevation below the grade shown on the plans, overexcavation will be paid in accordance with Table 1.

Table 1
Payment for Required Overexcavation

Variance of revised footing grade from plan grade	Payment terms	Variance of revised footing grade from plan grade
	"Structural Excavation" is a bid item	**"Structural Excavation" is not a bid item**
Up to and including 5 ft.	Unit price equal to 115% of unit price bid for "Structural Excavation"	$10 per cubic yard
Over 5 ft. up to 10 ft.	Unit price equal to 125% of unit price bid for "Structural Excavation"	$12 per cubic yard
Over 10 ft.	In accordance with Article 9.4, "Payment for Extra Work"	

D. Cement-Stabilized Backfill. Cement-stabilized backfill will be paid for at the unit price bid for "Cement Stabilized Backfill."

E. Cutting and Restoring Pavement. Cutting and restoring pavement will be paid for at the unit price bid for "Cutting and Restoring Pavement." Work done to repair damage to base or pavement incurred outside the limits shown on the plans, or the limits authorized by the Engineer, will not be measured for payment.

The unit prices bid are full compensation for excavation including removing obstructions and plugging drainage systems; bedding and backfilling including placing, sprinkling and compaction of material; soundings; cleaning and filling seams; constructing and removing cofferdams; de-watering, sheeting, or bracing excavations up to and including 5 ft. deep; pumps; drills; explosives; disposition of surplus material; cutting pavement and base to neat lines; and materials, hauling, equipment, labor, tools, and incidentals.

Flowable backfill will be paid for as provided in Item 401, "Flowable Backfill." Protection methods for open excavations deeper than 5 ft. will be measured and paid for as required under Item 402, "Trench Excavation Protection," or Item 403, "Temporary Special Shoring."

ITEM 401

FLOWABLE BACKFILL

401.1. Description. Furnish and place flowable backfill for trench, hole, or other void.

401.2. Materials.

A. Cement. Furnish cement conforming to DMS-4600, "Hydraulic Cement."

B. Fly Ash. Furnish fly ash conforming to DMS-4610, "Fly Ash."

C. Chemical Admixtures. Furnish chemical admixtures conforming to DMS-4640, "Chemical Admixtures for Concrete."

D. Fine Aggregate. Provide fine aggregate that will stay in suspension in the mortar to the extent required for proper flow and that meets the gradation requirements of Table 1.

Table 1
Aggregate Gradation Chart

Sieve Size	Percent Passing
3/4 in.	100
No. 200	0–30

Test fine aggregate gradation in accordance with Tex-401-A.

Plasticity Index (PI) must not exceed 6 when tested in accordance with Tex-106-A.

E. Mixing Water. Use mixing water conforming to the requirements of Item 421, "Hydraulic Cement Concrete."

401.3. Construction. Submit a construction method and plan, including mix design and shrinkage characteristics of the mix, for approval. Provide a means of filling the entire void area, and be able to demonstrate that this has been accomplished. Prevent the movement of any inserted structure from its designated location. If voids are found in the fill or if any of the requirements are not met as shown on the plans, remove and replace or correct the problem without additional cost to the Department.

Unless otherwise shown on the plans, furnish a mix meeting the requirements of Sections 401.3.A, "Strength," and 401.3.B, "Consistency."

A. Strength. The 28-day compressive strength range, when tested in accordance with Tex-418-A, must be between 80 psi and 150 psi unless otherwise directed. Two specimens are required for a strength test, and the compressive strength is defined as the average of the breaking strength of the 2 cylinders.

B. Consistency. Design the mix to be placed without consolidation and to fill all intended voids. Fill an open-ended, 3-in.-diameter-by-6-in.-high cylinder to the top to test the consistency. Immediately pull the cylinder straight up. The correct consistency of the mix must produce a minimum 8-in.-diameter circular spread with no segregation.

When necessary, use specialty type admixtures to enhance the flowability, reduce shrinkage, and reduce segregation by maintaining solids in suspension. All admixtures must be used and proportioned in accordance with the manufacturer's recommendations.

Mix the flowable fill using a central-mixed concrete plant, ready-mix concrete truck, pug mill, or other approved method.

Furnish all labor, equipment, tools, containers, and molds required for sampling, making, transporting, curing, removal, and disposal of test specimens. Furnish test molds meeting the requirements of Tex-447-A. Transport, strip, and cure the test specimens as scheduled at the designated location. Cure test specimens in accordance with Tex-447-A. The Engineer will sample, make, and test all specimens. Dispose of used, broken specimens in an approved location and manner. The frequency of job control testing will be at the direction of the Engineer.

401.4. Measurement. This Item will be measured by the cubic yard of material placed. Measurement will not include additional volume caused by slips, slides, or cave-ins resulting from the Contractor's operations.

401.5. Payment. The work performed and materials furnished in accordance with this Item and measured as provided under "Measurement" will be paid for at the unit price bid for "Flowable Backfill." This price is full compensation for furnishing, hauling, and placing materials and for equipment, tools, labor, and incidentals.

ITEM 416

DRILLED SHAFT FOUNDATIONS

416.1. Description. Construct foundations consisting of reinforced or non-reinforced concrete drilled shafts with or without bell footings.

416.2. Materials. Use materials that meet the requirements of the following Items:

- Item 421, "Hydraulic Cement Concrete"
- Item 440, "Reinforcing Steel"
- Item 448, "Structural Field Welding"

Unless otherwise shown on the plans, use concrete for drilled shafts that meets the requirements of Table 1.

Table 1
Concrete for Drilled Shafts

Drilled Shaft Type	Concrete
Non-reinforced	Class A
Reinforced	Class C
Slurry and underwater concrete placement	Class SS

Use coarse aggregate Grade 4, 5, or 6 for drilled shaft concrete in reinforced drilled shafts. Grade 2 or 3 may be used if the shaft is dry and reinforcing steel has a 5-in. minimum clear spacing.

Use a water-reducing, retarding admixture in accordance with DMS-4640, "Chemical Admixtures for Concrete," in all concrete when using casing that will be pulled or when placing shafts underwater or under slurry.

Use concrete with slump that meets the requirements of Table 2 as determined by Tex-415-A.

Table 2
Slump Requirements

Placement Type	Minimum Acceptable Placement Slump, in.	Recommended Design and Placement Slump, in.	Maximum Acceptable Placement Slump, in.
Dry	5-1/2	6-1/2	7-1/2
Underwater and under slurry	7	8	9

When casing is to be pulled or when concrete is to be placed underwater or under slurry, perform a slump loss test in accordance with Tex-430-A before beginning work. Provide concrete that will maintain a slump of at least 4 in. throughout the entire anticipated time of concrete placement. Time of concrete placement is described in Sections 416.3.F, "Concrete," and 416.3.G, "Additional Requirements for Slurry Displacement or Underwater Concrete Placement Methods." Note the temperature of the concrete mix at the beginning of the slump loss test. If concrete temperature at the time of placement into the drilled shaft is more than 10° higher than the slump loss test temperature, do not place the concrete. Use ice or other concrete cooling ingredients to lower concrete temperature, or run additional slump loss tests at the higher temperatures. Slump loss testing will be waived if anticipated time of concrete placement is less than 90 minutes.

Use drilling slurry that meets the requirements of Table 3, as determined by Tex-130-E.

Table 3
Slurry Requirements

Before Introduction into the Excavation		Sampled from the Bottom of the Excavation before Concreting		
Specific Gravity	**Sand Content**	**Specific Gravity**	**Viscosity (seconds)**	**Sand Content**
≤ 1.10	≤ 1%	≤ 1.15	≤ 45	≤ 6%

Use mineral slurry consisting of processed bentonite or attapulgite clays mixed with clean fresh water. Do not use PHPA (partially hydrolized polyacrylamide) polymeric slurry or any other fluid composed primarily of a polymer solution.

Before placing concrete, sample slurry from the bottom of the hole, and test it in accordance with Tex-130-E. Use a pump or air lift to remove slurry that does not meet the requirements of Table 3 while adding fresh clean slurry to the top of the hole to maintain the slurry level. Continue this operation until the slurry sampled from the bottom of the hole meets the requirements.

416.3. Construction. Place the shaft to within the following tolerances.

- Vertical plumbness – 1 in. per 10 ft. of depth.
- Center of shaft located under column – 1 in. of horizontal plan position.
- Center of shaft located under footing – 3 in. of horizontal plan position.

Complete the embankment at bridge ends before installing drilled shafts that pass through the fill. Refer to Item 423, "Retaining Walls," for provisions for drilled shafts passing through the structural volume of retaining walls.

A. Excavation. The plans indicate the expected depths and elevations for encountering satisfactory bearing material. Excavate as required for the shafts and bell footings through all materials encountered to the dimensions and elevations shown on the plans or required by the site conditions. Removal of man-made obstructions not shown on the plans will be paid for in accordance with Article 9.4, "Payment for Extra Work." If satisfactory founding material is not encountered at plan elevation, adjust the bottom of the shaft or alter the foundation, as determined by the Engineer, to satisfactorily comply with design requirements. Blasting is not allowed for excavations.

If caving conditions are encountered, stop drilling and adopt a construction method that stabilizes the shaft walls.

Do not excavate a shaft within 2 shaft diameters (clear) of an open shaft excavation, or one in which concrete has been placed in the preceding 24 hours.

Dispose of material excavated from shafts and bells and not incorporated into the finished project. Dispose of excavated material in accordance with the plans and with federal, state, and local laws.

Provide suitable access, lighting, and equipment for proper inspection of the completed excavation and for checking the dimensions and alignment of shafts and bell excavation.

B. Core Holes. If directed, take cores to determine the character of the supporting materials. Use a method that will result in recovery of an intact sample adequate for judging the character of the founding material. Such cores should be at least 5 ft. deeper than the proposed founding grade or a depth equal to the diameter of the shaft, whichever is greater. Take these cores when the excavation is approximately complete.

C. Casing. Use casing when necessary to prevent caving of the material or to exclude ground water. Provide casing with an outside diameter not less than the specified diameter of the shaft. Use casing strong enough to withstand handling stresses and pressures of concrete and of the surrounding earth or water, and that is watertight, smooth, clean, and free of accumulations of hardened concrete.

Drill the portion of the shaft below the casing as close as possible to the specified shaft diameter. The portion of shaft below the casing may be as much as 2 in. smaller than the specified shaft diameter.

Use construction methods that result in a minimal amount of disturbed soil being trapped outside the casing. This does not apply to temporary undersized casings used to protect workers inside shafts or to drilled shafts designed for point bearing only.

Do not leave any casing in place unless authorized or shown on the plans. Do not extract casing until after placing the concrete to an appropriate level. Maintain sufficient concrete in the casing at all times to counteract soil and water pressure. Before and during concrete placement, rotate or move the casing up or down a few inches if necessary to facilitate extraction of the casing.

D. Requirements for Slurry Displacement Method. Unless otherwise shown on the plans, the slurry displacement method may be used to construct drilled shafts. Use this method to support the sides of the excavation with processed mineral slurry that is then displaced by concrete to form a continuous concrete shaft.

Do not use casing other than surface casing. Do not use surface casing longer than 20 ft. without approval. Do not extract the surface casing until after placing the concrete.

For slurry mixed at the project site, pre-mix it in a reservoir of sufficient capacity to fill the excavation and for recovery of the slurry during concrete placement. Do not mix slurry in the shaft excavation or other hole. Allow adequate time for hydration of the slurry prior to introduction into the excavation.

During and after drilling maintain a head of slurry in the shaft excavation at or near ground level or higher as necessary to counteract ground water pressure.

Just before placing reinforcing steel, use an air lift or proper size cleanout bucket to remove any material that may have fallen from the sides of the excavation or accumulated on the bottom after the completion of drilling. Use a cleanout bucket if material is too large to be picked up with an air lift.

If concrete placement is not started within 4 hours of the completion of the shaft excavation, reprocess the hole with the auger as directed. Then clean the bottom with an air lift or cleanout bucket, and check the slurry at the bottom of the hole for compliance with the slurry requirements of Article 416.2, "Materials."

If the slurry forms a gel before concrete placement, agitate the congealed slurry to liquefaction just before concrete placement and whenever directed.

Recover and dispose of all slurry as approved by the Engineer, and in accordance with all federal, state, and local laws. Do not discharge slurry into or in close proximity to streams or other bodies of water.

E. Reinforcing Steel. Completely assemble the cage of reinforcing steel, and place it as a unit immediately before concrete placement. The cage consists of longitudinal bars and lateral reinforcement (spiral reinforcement, lateral ties, or horizontal bands). If overhead obstacles prevent placement of the cage as a single unit, connect individual segments with couplers or by lapping steel as approved.

If the shaft is lengthened beyond plan length, extend the reinforcing steel cage as follows, unless directed otherwise:

- For shafts supporting structures other than bridges, extend the cage to the bottom.
- For bridge shafts with plan lengths of less than 25 ft., extend the cage to 25 ft. or to the bottom, whichever is shorter.
- For bridge shafts with plan lengths at least 25 ft. that are lengthened less than 33% of plan length, extending the cage is not necessary.
- For bridge shafts with plan lengths at least 25 ft. that are lengthened more than 33% of plan length, extend the cage as directed.

If the cage does not reach the bottom of the shaft, it may be suspended, or a portion of the longitudinal steel may be extended to support the cage on the bottom of the shaft. Bars used to extend or support the cage may be lap spliced or welded by a qualified welder. Place the extension at the bottom of the shaft.

If using spiral reinforcement, tie it to the longitudinal bars at a spacing of at most 24 in., or as required for a stable cage. Do not weld lateral reinforcement to longitudinal bars unless otherwise shown on the plans.

Center the reinforcing steel cage in the excavation using approved centering devices. Use enough devices to hold the cage in position along its entire length. Do not use square concrete spacer blocks in cased shafts.

Support or hold down the cage to control vertical displacement during concrete placement or extraction of the casing. Use support that is concentric with the cage to prevent racking and distortion of the steel.

Check the elevation of the top of the steel cage before and after concrete placement or after casing extraction when casing is used. Downward movement of the steel up to 6 in. per 20 ft. of shaft length and upward movement of the steel up to 6 in. total are acceptable.

Maintain the minimum length of steel required for lap with column steel. Use dowel bars if the proper lap length is provided both into the shaft and into the column. Locate and tie all dowel bars into the cage before placing concrete or insert dowel bars into fresh, workable concrete.

Locate and tie anchor bolts when required prior to placement of concrete. Use templates or other devices to assure accurate placement of anchor bolts.

F. Concrete. Perform all work in accordance with requirements of Item 420, "Concrete Structures." Mass concrete placement requirements do not apply to drilled shafts.

Form portions of drilled shaft that project above natural ground.

Remove loose material and accumulated seep water from the bottom of the excavation before placing concrete. If water cannot be removed, place concrete using underwater placement methods.

Place concrete as soon as possible after all excavation is complete and reinforcing steel is placed. Provide workable concrete that does not require vibrating or rodding. Vibrate formed portions of drilled shafts.

Place concrete continuously for the entire length of the shaft. For dry shafts of 24 in. or smaller diameter, limit free fall of concrete to 25 ft. Use a suitable tube or tremie to prevent segregation of materials. Use a tube or tremie in sections to provide proper discharge and to permit raising as the placement progresses. For dry shafts over 24 in. diameter, concrete can be allowed to free fall an unlimited distance if it does not strike the reinforcing cage or sides of the hole during placement. When free fall is used, provide a hopper with a minimum 3-ft.-long drop tube at the top of the shaft to direct concrete vertically down the center of the shaft. Do not use a shovel or other means to simply deflect the concrete discharge from the truck.

For cased shafts, maintain a sufficient head of concrete at all times above the bottom of the casing to overcome hydrostatic pressure. Extract casing at a slow, uniform rate with the pull in line with the axis of the shaft. Monitor the concrete level in the casing during extraction. Stop the extraction and add concrete to the casing as required to ensure a completely full hole upon casing removal. The elapsed time from the mixing of the first concrete placed into the cased portion of the shaft until the completion of extraction of the casing must not exceed the time for which the concrete maintains a slump of over 4 in. in accordance with Article 416.2, "Materials." If the elapsed time is exceeded, modify the concrete mix, the construction procedures, or both for subsequent shafts.

Cure the top surface and treat any construction joint area in accordance with Item 420, "Concrete Structures."

G. Additional Requirements for Slurry Displacement or Underwater Concrete Placement Methods. Place concrete on the same day that the shaft is excavated and as soon as possible after all excavation is complete and reinforcing steel is placed. Use an air lift or cleanout bucket of the proper size to clean the bottom of the excavation prior to placing the reinforcing steel cage and concrete. Place concrete through a closed tremie or pump it to the bottom of the excavation. Initially seal the tremie or pump line to positively separate the concrete from the slurry or water. Place concrete continuously from the beginning of placement until the shaft is completed. If using a tremie, keep it full of concrete and well submerged in the previously placed concrete at all times. Raise the tremie as necessary to maintain the free flow of concrete and the stability of any casing used. If using a pump, keep the discharge tube submerged in the previously placed concrete at all times. Place additional concrete to ensure the removal of any contaminated concrete at the top of the shaft. At the completion of the pour, allow the top portion of concrete to flush completely from the hole until there is no evidence of slurry or water contamination. Do not attempt to remove this concrete with shovels, pumps or other means. Level the top of shaft with hand tools as necessary.

Use a sump or other approved method to channel displaced fluid and concrete away from the shaft excavation. Recover slurry and dispose of it as approved. Do not discharge displaced fluids into or in

close proximity to streams or other bodies of water. For pours over water, provide a collar or other means of capturing slurry and the top portion of concrete flushed from the shaft.

If concrete placement is interrupted due to withdrawal of the submerged end of the tremie or pump discharge tube before completion, remove the tube, reseal it at the bottom, penetrate with the tube into the concrete already placed by at least 5 ft., and recharge it before continuing.

The elapsed time from the mixing of the first concrete placed until the completion of concrete placement, including extraction of the casing, must not exceed the time for which the concrete maintains a slump of over 4 in. in accordance with Article 416.2, "Materials." If the elapsed time is exceeded, modify the concrete mix, the construction procedures, or both for subsequent shafts.

H. Test Load. If required, test load shafts in accordance with Item 405, "Foundation Test Load."

416.4. Measurement.

A. Drilled Shaft. Drilled shaft foundations will be measured by the foot to the bottom of the shaft.

1. **Interior Bents and Piers.** Shafts will be measured from a point approximately 6 in. below the finished earthwork elevation at the center of each shaft, unless specific elevations or dimensions are indicated on the plans or unless the Engineer directs otherwise to meet unusual conditions. The bent height shown on the plans is for estimating purposes only and does not control the top-of-shaft measurement.
2. **Abutment Bents and Retaining Walls.** Shafts will be measured from the bottom of footing or cap elevation.
3. **Other Non-Bridge Structures.** Shafts will be measured from the top of the shaft.

B. Bell Footing. Bell footings will be measured by the cubic yard of concrete outside of the plan dimensions of the shaft. Bell footings are a plans quantity measurement item. The quantity to be paid is the quantity shown in the proposal, unless modified by Article 9.2, "Plans Quantity Measurement." Additional measurements or calculations will be made if adjustments of quantities are required.

C. Core Hole. Core holes will be measured by each core hole drilled.

416.5. Payment. The unit prices bid for the various classifications of drilled shafts and bell footings will be full compensation for excavation; furnishing, placing, and removing casing; furnishing, processing, and recovering slurry; pumping; furnishing, and placing reinforcing steel; furnishing and placing concrete, including additional concrete required to fill an oversize casing or oversize excavation; conducting slump loss tests; backfilling; disposing of cuttings and slurry; and materials, tools, equipment, labor, and incidentals.

When the bottom of a drilled shaft is placed at an elevation below plan grade, no direct payment will be made for extra reinforcement placed to support the cage. The extra reinforcement will be considered subsidiary to the price bid per foot of shaft. No extra payment will be made for casings left in place.

No payment will be made for "Bell Footing" or "Drilled Shaft" until the concrete has been placed.

A. Drilled Shaft. The work performed and materials furnished in accordance with this Item and measured as provided under "Measurement" will be paid for at the unit price bid for "Drilled Shaft" or "Drilled Shaft (Non-reinforced)" or "Drilled Shaft (Sign Mounts)" or "Drilled Shaft (High Mast Pole)" of the specified diameter, subject to the limitations for overruns authorized by the Engineer given in Section 416.5.A.1, "Overrun."

1. **Overrun.** Payment for individual completed shaft lengths up to and including 5 ft. in excess of the maximum plan length shaft, as defined in Section 416.5.A.2, "Maximum Plan Length Shaft," will be made at the unit price bid per foot of the specified diameter.

   Payment for the portion of individual completed shaft length in excess of 5 ft. and up to and including 15 ft. more than the maximum plan length shaft, as defined in this Item, will be made at a unit price equal to 115% of the unit price bid per foot of the specified diameter.

   Payment for that portion of individual completed shaft length in excess of 15 ft. more than the maximum plan length shaft, as defined in Section 416.5.A.2, will be made at a unit price equal to 125% of the unit price bid per foot of the specified diameter.

2. **Maximum Plan Length Shaft.** Payment described above is subject to the following provisions for extra depth drilling:
   - For bridge structures, the maximum plan length shaft is the maximum length shaft, regardless of diameter, for any drilled shaft on that specific bridge.
   - For retaining walls, the maximum plan length shaft is the maximum length shaft, regardless of diameter, for any drilled shaft on that specific retaining wall.
   - For overhead sign structures, the maximum plan length shaft is the maximum length shaft, regardless of diameter, for any overhead sign structures included in the contract.
   - For high mast illumination poles, the maximum plan length shaft is the maximum length shaft, regardless of diameter, for any high mast illumination pole included in the contract.

B. Bell Footing. Bell footings constructed to specified dimensions will be paid for at the unit price bid per cubic yard for "Bell Footings." The quantity to be paid for will be the quantity shown on the plans, unless revised by the Engineer in accordance with "Measurement."

C. Core Hole. Core holes will be paid at $125 each.

ITEM 420

CONCRETE STRUCTURES

420.1. Description. Construct concrete structures.

420.2. Materials.

A. Concrete. Provide concrete conforming to Item 421, "Hydraulic Cement Concrete." For each type of structure or unit, provide the class of concrete shown on the plans or in pertinent governing specifications.

B. Grout or Mortar. Provide grout or mortar conforming to Section 421.2.F, "Mortar and Grout."

C. Latex. Provide an acrylic-polymer latex admixture (acrylic resin emulsion per DMS-4640, "Chemical Admixtures for Concrete") suitable for producing polymer-modified concrete or mortar. Do not allow latex to freeze.

D. Reinforcing Steel. Provide reinforcing steel conforming to Item 440, "Reinforcing Steel."

E. Expansion Joint Material. Provide materials that conform to the requirements of DMS-6310, "Joint Sealants and Fillers":

- Provide preformed fiber expansion joint material that conforms to the dimensions shown on the plans. Provide preformed bituminous fiber material unless otherwise specified.
- Provide a Class 4, 5, or 7 low-modulus silicone sealant unless otherwise directed.
- Provide asphalt board that conforms to dimensions shown on the plans.
- Provide re-bonded neoprene filler that conforms to the dimensions shown on the plans.

F. Waterstop. Provide rubber or polyvinyl chloride (PVC) waterstops that conform to DMS-6160, "Waterstops, Nylon Reinforced Neoprene Sheet, and Elastomeric Pads," unless otherwise shown on the plans.

G. Evaporation Retardants. Provide evaporation retardants that conform to the requirements of DMS-4650, "Hydraulic Cement Concrete Curing Materials and Evaporation Retardants."

H. Curing Materials. Provide membrane curing compounds that conform to the requirements of DMS-4650, "Hydraulic Cement Concrete Curing Materials and Evaporation Retardants."

Provide cotton mats that consist of a filling material of cotton "bat" or "bats" (at least 12 oz. per square yard) completely covered with unsized cloth (at least 6 oz. per square yard) stitched longitudinally with continuous parallel rows of stitching spaced at less than 4 in., or tuft both longitudinally and transversely at intervals less than 3 in. Provide cotton mats that are free from tears and in good general condition. Provide a flap at least 6 in. wide consisting of 2 thicknesses of the covering and extending along 1 side of the mat.

Provide polyethylene sheeting that is at least 4 mils thick and free from visible defects. Provide only clear or opaque white sheeting when the ambient temperature during curing exceeds 60°F or when applicable to control temperature during mass pours.

Provide burlap-polyethylene mats made from burlap impregnated on 1 side with a film of opaque white pigmented polyethylene, free from visible defects. Provide laminated mats that have at least 1 layer of an impervious material such as polyethylene, vinyl plastic, or other acceptable material (either as a solid sheet or impregnated into another fabric) and are free of visible defects.

I. Epoxy. Unless otherwise specified, provide epoxy materials that conform to DMS-6100, "Epoxy and Adhesives."

420.3. Equipment.

A. Fogging Equipment. Use fogging equipment that can apply water in a fine mist, not a spray. Produce the fog using equipment that pumps water or water and air under high pressure through a suitable atomizing nozzle. Use hand-held mechanical equipment portable enough to use in the direction of any prevailing wind and adaptable for intermittent use to prevent excessive wetting of the concrete.

B. Transporting and Placing Equipment. Use appropriate transporting and placing equipment such as buckets, chutes, buggies, belt conveyors, pumps, or other equipment as necessary. Do not transport or convey concrete through equipment made of aluminum. Use carts with pneumatic tires for carting or wheeling concrete over newly placed slabs.

Use tremies to control the fall of concrete or for underwater placement. Use tremies that are watertight and of large enough diameter to allow the placement of the concrete but less than 14 in. in diameter. For underwater placements, construct the tremie so that the bottom can be sealed and opened once the tremie has been fully charged with concrete.

Use pumps with lines at least 5 in. I.D. where Grade 2 or smaller coarse aggregate is used, and at least 8 in. I.D. for Grade 1 coarse aggregate.

C. Vibrators. Use immersion-type vibrators for consolidation of concrete. Provide at least 1 standby vibrator for emergency use.

D. Screeds and Work Bridges for Bridge Slabs. For bridge slabs use a self-propelled transverse screed or a mechanical longitudinal screed. Use transverse screeds that are able to follow the skew of the bridge for skews greater than 15° unless otherwise approved. Equip transverse screeds with a pan float. Manually operated screeding equipment may be used if approved for top slabs of culverts, small placements, or unusual conditions. Use screeds that are rigid and heavy enough to hold true to shape and have sufficient adjustments to provide for the required camber or section. Equip the screeds, except those of the roller drum type, with metal cutting edges.

For bridge slabs, use sufficient work bridges for finishing operations. Mount a carpet drag to a work bridge or a moveable support system that can vary the area of carpet in contact with the concrete. Use carpet pieces long enough to cover the entire width of the placement. Splice or overlap the carpet as necessary. Ensure that enough carpet is in contact longitudinally with the concrete being placed to provide the desired surface finish. Use artificial grass-type carpeting having a molded polyethylene pile face with a blade length between 5/8 and 1 in. and with a minimum weight of 70 oz. per square yard. Ensure that the carpet has a strong, durable backing not subject to rot and that the facing is adequately bonded to the backing to withstand the intended use. A burlap drag, attached to the pan float on a transverse screed, may be used instead of the carpet drag.

E. Temperature Recording Equipment. For mass concrete operations or as otherwise specified, use strip chart temperature recording devices, recording maturity meters in accordance with Tex-426-A, or other approved devices that are accurate to within ±2°F within the range of 32 to 212°F.

F. Artificial Heating Equipment. Use artificial heating equipment as necessary for maintaining the concrete temperatures as specified in Section 420.4.G.11, “Placing Concrete in Cold Weather.”

G. Sawing Equipment. Use sawing equipment capable of cutting grooves in completed bridge slabs and top slabs of direct-traffic culverts. Provide grooves that are 1/8 to 3/16 in. deep and nominally 1/8 in. wide. Groove spacing may range from 5/8 to 1 in. Use sawing equipment capable of cutting grooves in hardened concrete to within 18 in. of the barrier rail or curb.

H. Spraying Equipment. Use mechanically powered pressure sprayers, either air or airless, with appropriate atomizing nozzles for the application of membrane curing. Mechanically driven spraying equipment, adaptable to the rail system used by the screeds, may be used for applying membrane curing to bridge slabs. If approved, use hand-pressurized spray equipment equipped with 2 or 3 fan-spray nozzles. Ensure that the spray from each nozzle overlaps the spray from adjacent nozzles by approximately 50%.

I. Concrete Testing Equipment. Provide testing equipment for use by the Engineer in accordance with Section 421.3.C, “Testing Equipment.”

420.4. Construction. Before starting work, obtain approval for proposed construction methods. Approval of construction methods and equipment does not relieve the Contractor’s responsibility for safety or correctness of methods, adequacy of equipment, or completion of work in full accordance with the Contract.

Unless otherwise shown on the plans, it is the Contractor’s option to perform testing on structural concrete (structural classes of concrete are identified in Table 5 of Section 421.4.A, “Classification and Mix

Design") to determine the in-situ strength to address the schedule restrictions in Section 420.4.A, "Schedule Restrictions." The Engineer may require the Contractor to perform this testing for concrete placed in cold weather. For Contractor-performed testing, make enough test specimens to ensure that strength requirements are met for the operations listed in Section 420.4.A. Make at least 1 set of test specimens for each element cast each day. Cure these specimens under the same conditions as the portion of the structure involved for all stages of construction. Ensure safe handling, curing, and storage of all test specimens. Provide testing personnel, and sample and test the hardened concrete in accordance with Section 421.4.G, "Sampling and Testing of Concrete." The maturity method, Tex-426-A, may be used for in-situ strength determination for schedule restrictions if approved. Coring will not be allowed for in-situ strength determination for schedule restrictions. Provide the Engineer the opportunity to witness all testing operations. Report all test results to the Engineer.

If the Contractor does not wish to perform schedule restriction testing, the Engineer's 7-day lab-cured tests, performed in accordance with Section 421.4.G.5, "Adequacy and Acceptance of Concrete," will be used for schedule restriction determinations. The Engineer may require additional time for strength gain to account for field curing conditions such as cold weather.

A. Schedule Restrictions. Unless otherwise shown on the plans, construct and open completed structures to traffic with the following limitations:

1. **Setting Forms.** Attain at least 2,500 psi compressive strength before erecting forms on concrete footings supported by piling or drilled shafts, or on individual drilled shafts. Erect forms on spread footings and culvert footings after the footing concrete has aged at least 2 curing days as defined in Section 420.4.J, "Curing Concrete." Place concrete only after the forms and reinforcing steel have been inspected by the Engineer.

   Support tie beam or cap forms by falsework on previously placed tie beams only if the tie beam concrete has attained a compressive strength of 2,500 psi and the member is properly supported to eliminate stresses not provided for in the design. Maintain curing as required until completion of the curing period.

   Place superstructure forms or falsework on the substructure only if the substructure concrete has attained a compressive strength of 3,000 psi.

2. **Removal of Forms and Falsework.** Keep in place weight-supporting forms and falsework for bridge components and culvert slabs until the concrete has attained a compressive strength of 2,500 psi in accordance with Section 420.4.K, "Removal of Forms and Falsework." Keep all forms for mass placements defined in Section 420.4.G.14, "Mass Placements," in place for 4 days following concrete placement.

3. **Placement of Superstructure Members.** Do not place superstructure members before the substructure concrete has attained a compressive strength of 3,000 psi.

4. **Longitudinal Screeding of Bridge Slabs.** Place a longitudinal screed directly on previously placed concrete slabs to check and grade an adjacent slab only after the previously placed slab has aged at least 24 hr. Place and screed the concrete after the previously placed slabs have aged at least 48 hr. Maintain curing of the previously placed slabs during placement.

5. **Staged Placement of Bridge Slabs on Continuous Steel Units.** When staged placement of a slab is required, ensure that the previously placed concrete attains a compressive strength of 3,000 psi before placing the next stage placement. Multiple stages may be placed in a single day if approved.

6. **Storage of Materials on the Structure.** Obtain approval to store materials on completed portions of a structure once a compressive strength of 3,000 psi has been attained. Maintain proper curing if materials will be stored on structures before completion of curing.

7. **Placement of Equipment and Machinery.** Do not place erection equipment or machinery on the structure until the concrete has attained the design strength specified in Section 421.4.A, "Classification and Mix Design," unless otherwise approved.

8. **Carting of Concrete.** Once the concrete has attained a compressive strength of 3,000 psi, it may be carted, wheeled, or pumped over completed slabs. Maintain curing during these operations.

9. **Placing Bridge Rails.** Reinforcing steel and concrete for bridge rails may be placed on bridge slabs once the slab concrete has attained a compressive strength of 3,000 psi. If slipforming methods are used for railing concrete, ensure the slab concrete has attained its design strength specified in Section 421.4.A, "Classification and Mix Design," before placing railing concrete.

10. **Opening to Construction Traffic.** Bridges and direct-traffic culverts may be opened to all construction traffic when the design strength specified in Section 421.4.A, "Classification and Mix Design," has been attained if curing is maintained.

11. **Opening to Full Traffic.** Bridges and direct-traffic culverts may be opened to the traveling public when the design strength specified in Section 421.4.A, "Classification and Mix Design," has been attained for all structural elements including railing subject to impact from traffic, when curing has been completed for all slabs, and when the concrete surface treatment has been applied in accordance with Item 428, "Concrete Surface Treatment." Obtain approval before opening bridges and direct-traffic culverts to the traveling public. Other noncritical structural and nonstructural concrete may be opened for service upon the completion of curing unless otherwise specified or directed.

12. **Post-Tensioned Construction.** For structural elements designed to be post-tensioned ensure that strength requirements on the plans are met for stressing and staged loading of structural elements.

13. **Backfilling.** Backfill in accordance with Section 400.3.C, "Backfill."

B. Plans for Falsework and Forms. Submit 2 copies of plans for falsework and forms for piers, superstructure spans over 20 ft. long, bracing systems for girders when the overhang exceeds 3 ft. 6 in., and bridge widening details. Submit similar plans for other units of the structure as directed. Show all essential details of proposed forms, falsework, and bracing. Have a licensed professional engineer design, seal, and sign these plans. Department approval is not required, but the Department reserves the right to request modifications to the plans. The Contractor is responsible for the adequacy of these plans.

C. Falsework. Design and construct falsework to carry the maximum anticipated loads safely, including wind loads, and to provide the necessary rigidity. Submit details in accordance with Section 420.4.B, "Plans for Falsework and Forms."

Design job-fabricated falsework assuming a weight of 150 pcf for concrete, and include a liveload allowance of 50 psf of horizontal surface of the form. Do not exceed 125% of the allowable stresses used by the Department for the design of structures.

For commercially produced structural units used in falsework, do not exceed the manufacturer's maximum allowable working loads for moment and shear or end reaction. Include a liveload allowance of 35 psf of horizontal form surface in determining the maximum allowable working load for commercially produced structural units.

Provide timber that is sound, in good condition, and free from defects that would impair its strength. Provide timber that meets or exceeds the species, size, and grade requirements in the submitted falsework plans.

Provide wedges made of hardwood or metal in pairs to adjust falsework to desired elevations to ensure even bearing. Do not use wedges to compensate for incorrectly cut bearing surfaces.

Use sills or grillages that are large enough to support the superimposed load without settlement. Take precautions to prevent settling of the supporting material unless the sills or grillages are founded on solid rock, shale, or other hard materials.

Place falsework that cannot be founded on a satisfactory spread footing on piling or drilled shafts with enough bearing capacity to support the superimposed load without settlement. Drive falsework piling to the required resistance determined by the applicable formula in Item 404, "Driving Piling." Design drilled shafts for falsework to carry the superimposed load using both skin friction and point bearing.

Weld in conformance with Item 448, "Structural Field Welding." Securely brace each falsework bent to provide the stiffness required, and securely fasten the bracing to each pile or column it crosses.

Remove falsework when it is no longer required or as indicated on the submitted falsework plan. Pull or cut off foundations for falsework at least 2 ft. below finished ground level. Completely remove

falsework, piling, or drilled shafts in a stream, lake, or bay to the approved limits to prevent obstruction to the waterway.

D. Forms. Submit formwork plans in accordance with Section 420.4.B, "Plans for Falsework and Forms."

1. General. Except where otherwise specified or permitted, provide forms of either timber or metal.

Design forms for the pressure exerted by a liquid weighing 150 pcf. Take the rate of concrete placement into consideration in determining the depth of the equivalent liquid. Include a liveload allowance of 50 psf of horizontal surface for job-fabricated forms. Do not exceed 125% of the allowable stresses used by the Department for the design of structures.

For commercially produced structural units used for forms, do not exceed the manufacturer's maximum allowable working loads for moment and shear or end reaction. Include a liveload allowance of 35 psf of horizontal form surface in determining the maximum allowable working load for commercially produced structural units.

Provide steel forms for round columns unless otherwise approved. Refer to Item 427, "Surface Finishes for Concrete," for additional requirements for off-the-form finishes.

Provide commercial form liners for imprinting a pattern or texture on the concrete surface as shown on the plans and specified in Section 427.4.B.2.d, "Form Liner Finish."

Provide forming systems that are practically mortar-tight, rigidly braced, and strong enough to prevent bulging between supports, and maintain them to the proper line and grade during concrete placement. Maintain forms in a manner that prevents warping and shrinkage. Do not allow offsets at form joints to exceed 1/16 in.

For forms to be left in place, use only material that is inert, nonbiodegradable, and nonabsorptive.

Attachment of forms or screed supports for bridge slabs to steel I-beams or girders may be by welding subject to the following requirements:

- Do not weld to tension flanges or to areas indicated on the plans.
- Weld in accordance with Item 448, "Structural Field Welding."

Take into account:

- deflections due to cast-in-place slab concrete and railing shown in the dead load deflection diagram in the setting of slab forms,
- differential beam or girder deflections due to skew angles and the use of certain stay-in-place slab forming systems, and
- deflection of the forming system due to the wet concrete.

For bridge approach slabs, securely stake forms to line and grade and maintain in position. Rigidly attach inside forms for curbs to the outside forms.

Construct all forms to permit their removal without marring or damaging the concrete. Clean all forms and footing areas of any extraneous matter before placing concrete. Provide openings in forms if needed for the removal of laitance or foreign matter

Treat the facing of all forms with bond-breaking coating of composition that will not discolor or injuriously affect the concrete surface. Take care to prevent coating of the reinforcing steel.

Complete all preparatory work before requesting permission to place concrete.

If the forms show signs of bulging or sagging at any stage of the placement, cease placement and remove the portion of the concrete causing this condition immediately if necessary. Reset the forms and securely brace them against further movement before continuing the placement.

2. Timber Forms. Provide properly seasoned good-quality lumber that is free from imperfections that would affect its strength or impair the finished surface of the concrete. Provide timber or lumber that meets or exceeds the requirements for species and grade in the submitted formwork plans.

Maintain forms or form lumber that will be reused so that it stays clean and in good condition. Do not use any lumber that is split, warped, bulged, or marred or that has defects that will produce inferior work, and promptly remove such lumber from the work.

Provide form lining for all formed surfaces except:

- the inside of culvert barrels, inlets, manholes, and box girders;
- the bottom of bridge slabs between beams or girders;
- surfaces that are subsequently covered by backfill material or are completely enclosed; and
- any surface formed by a single finished board or by plywood.

Provide form lining of an approved type such as masonite or plywood. Do not provide thin membrane sheeting such as polyethylene sheets for form lining.

Use plywood at least 3/4 in. thick. Place the grain of the face plies on plywood forms parallel to the span between the supporting studs or joists unless otherwise indicated on the submitted form drawings.

Use plywood for forming surfaces that remain exposed that meets the requirements for B-B Plyform Class I or Class II Exterior of the U.S. Department of Commerce Voluntary Product Standard PS 1.

Space studs and joists so that the facing form material remains in true alignment under the imposed loads.

Space wales closely enough to hold forms securely to the designated lines, scabbed at least 4 ft. on each side of joints to provide continuity. Place a row of wales near the bottom of each placement.

Place facing material with parallel and square joints, securely fastened to supporting studs.

For surfaces exposed to view and receiving only an ordinary surface finish as defined in Section 420.4.M, “Ordinary Surface Finish,” place forms with the form panels symmetrical (long dimensions set in the same direction). Make horizontal joints continuous.

Make molding for chamfer strips or other uses of materials of a grade that will not split when nailed and that can be maintained to a true line without warping. Dress wood molding on all faces. Unless otherwise shown on the plans, fill forms at all sharp corners and edges with triangular chamfer strips measuring 3/4 in. on the sides.

To hold forms in place, use metal form ties of an approved type or a satisfactory substitute of a type that permits ease of removal of the metal. Cut back wire ties at least 1/2 in. from the face of the concrete.

Use devices to hold metal ties in place that are able to develop the strength of the tie and adjust to allow for proper alignment.

Entirely remove metal and wooden spreaders that separate the forms as the concrete is being placed.

Provide adequate clean-out openings for narrow walls and other locations where access to the bottom of the forms is not readily attainable.

3. **Metal Forms.** Requirements for timber forms regarding design, mortar-tightness, filleted corners, beveled projections, bracing, alignment, removal, reuse, and wetting also apply to metal forms except that metal forms do not require lining unless specifically noted on the plans.

   Use form metal thick enough to maintain the true shape without warping or bulging. Countersink all bolt and rivet heads on the facing sides. Design clamps, pins, or other connecting devices to hold the forms rigidly together and to allow removal without damage to the concrete. Use metal forms that present a smooth surface and that line up properly. Keep metal free from rust, grease, and other foreign materials.

4. **Form Supports for Overhang Slabs.** Form supports that transmit a horizontal force to a steel girder or beam or to a prestressed concrete beam are permitted provided a satisfactory structural analysis has been made of the effect on the girder or beam as indicated in the submitted formwork plans.

   When overhang brackets are used on prestressed concrete beam spans with slab overhangs not exceeding 3 ft 6 in., use beam bracing as indicated in the plans. For spans with overhangs exceeding this amount, use additional support for the outside beams regardless of the type of beam

used. Submit details of the proposed bracing system in accordance with Section 420.4.B, “Plans for Falsework and Forms.”

Punch or drill holes full size in the webs of steel members for support of overhang brackets, or torch-cut them to 1/4 in. under size and ream them full size. Do not burn the holes full size. Leave the holes open unless otherwise shown on the plans. Never fill the holes by welding.

E. Drains. Install and construct weep holes and roadway drains as shown on the plans.

F. Placing Reinforcement. Place reinforcement as provided in Item 440, “Reinforcing Steel.” Do not weld reinforcing steel supports to I-beams or girders or to reinforcing steel except where shown on the plans.

Place post-tensioning ducts in accordance with the approved prestressing details and in accordance with Item 426, “Prestressing.” Keep ducts free of obstructions until all post-tensioning operations are complete.

G. Placing Concrete. Give the Engineer sufficient advance notice before placing concrete in any unit of the structure to permit the inspection of forms, reinforcing steel placement, and other preparations.

Follow the sequence of placing concrete shown on the plans or specified.

Do not place concrete when impending weather conditions would impair the quality of the finished work. If conditions of wind, humidity, and temperature are such that concrete cannot be placed without the potential for shrinkage cracking, place concrete in early morning or at night or adjust the placement schedule for more favorable weather. Consult the evaporation rate nomograph in the Portland Cement Association’s *Design and Control of Concrete Mixtures* for shrinkage cracking potential. When mixing, placing, and finishing concrete in non-daylight hours, adequately illuminate the entire placement site as approved.

If changes in weather conditions require protective measures after work starts, furnish adequate shelter to protect the concrete against damage from rainfall or from freezing temperatures as outlined in this Item. Continue operations during rainfall only if approved. Use protective coverings for the material stockpiles. Cover aggregate stockpiles only to the extent necessary to control the moisture conditions in the aggregates.

Allow at least 1 curing day after the concrete has achieved initial set before placing strain on projecting reinforcement to prevent damage to the concrete.

1. **Placing Temperature.** Place concrete according to the following temperature limits for the classes of concrete defined in Section 421.4.A, “Classification and Mix Design”:
   - Place Class C, F, H, K, or SS concrete only when its temperature at time of placement is between 50 and 95°F. Increase the minimum placement temperature to 60°F if ground-granulated blast furnace (GGBF) slag is used in the concrete.
   - When used in a bridge slab or in the top slab of a direct-traffic culvert, place Class CO, DC, or S concrete only when its temperature at the time of placement is between 50 and 85°F. Increase the minimum placement temperature to 60°F if GGBF slag is used in the concrete. The maximum temperature increases to 95°F if these classes are used for other applications.
   - Place Class A, B, and D concrete only when its temperature at the time of placement is greater than 50°F.
   - Place mass concrete, defined by Section 420.4.G.14, “Mass Placements,” only when its temperature at the time of placement is between 50 and 75°F.
2. **Transporting Time.** Place concrete delivered in agitating trucks within 60 min. after batching. Place concrete delivered in non-agitating equipment within 45 min. after batching. Revise the concrete mix design as necessary for hot weather or other conditions that contribute to quick setting of the concrete. Submit for approval a plan to demonstrate that these time limitations can be extended while ensuring the concrete can be properly placed, consolidated, and finished without the use of additional water.
3. **Workability of Concrete.** Place concrete with a slump as specified in Section 421.4.A.5, “Slump.” Concrete that exceeds the maximum slump will be rejected. Water may be added to the concrete before discharging any concrete from the truck to adjust for low slump provided that the

maximum mix design water–cement ratio is not exceeded. After introduction of any additional water or chemical admixtures, mix concrete in accordance with Section 421.4.E, “Mixing and Delivering Concrete.” Do not add water or chemical admixtures after any concrete has been discharged.

4. **Transporting Concrete.** Use a method and equipment capable of maintaining the rate of placement shown on the plans or required by this Item to transport concrete to the forms. Transport concrete by buckets, chutes, buggies, belt conveyors, pumps, or other methods.

   Protect concrete transported by conveyors from sun and wind to prevent loss of slump and workability. Shade or wrap with wet burlap pipes through which concrete is pumped as necessary to prevent loss of slump and workability.

   Arrange and use chutes, troughs, conveyors, or pipes so that the concrete ingredients will not be separated. When necessary to prevent segregation, terminate such equipment in vertical downspouts. Extend open troughs and chutes, if necessary, down inside the forms or through holes left in the forms.

   Keep all transporting equipment clean and free from hardened concrete coatings. Discharge water used for cleaning clear of the concrete.

5. **Preparation of Surfaces.** Thoroughly wet all forms, prestressed concrete panels, T-beams, and concrete box beams on which concrete is to be placed before placing concrete on them. Remove any remaining puddles of excess water before placing concrete. Provide surfaces that are in a moist, saturated surface-dry condition when concrete is placed on them.

   Ensure that the subgrade or foundation is moist before placing concrete for bridge approach slabs or other concrete placed on grade. Lightly sprinkle the subgrade if dry.

6. **Expansion Joints.** Construct joints and devices to provide for expansion and contraction in accordance with plan details and the requirements of this Section and Item 454, “Bridge Expansion Joints.”

   Prevent bridging of concrete or mortar around expansion joint material in bearings and expansion joints.

   Use forms adaptable to loosening or early removal in construction of all open joints and joints to be filled with expansion joint material. To avoid expansion or contraction damage to the adjacent concrete, loosen these forms as soon as possible after final concrete set to permit free movement of the span without requiring full form removal.

   When the plans show a Type A joint, provide preformed fiber joint material in the vertical joints of the roadway slab, curb, median, or sidewalk, and fill the top 1 in. with the specified joint sealing material unless noted otherwise. Install the sealer in accordance with Item 438, “Cleaning and Sealing Joints and Cracks (Rigid Pavement and Bridge Decks),” and the manufacturer’s recommendations.

   Use light wire or nails to anchor any preformed fiber joint material to the concrete on 1 side of the joint.

   Ensure that finished joints conform to the plan details with the concrete sections completely separated by the specified opening or joint material.

   Remove all concrete within the joint opening soon after form removal and again where necessary after surface finishing to ensure full effectiveness of the expansion joint.

7. **Construction Joints.** A construction joint is the joint formed by placing plastic concrete in direct contact with concrete that has attained its initial set. Monolithic placement means that the manner and sequence of concrete placing does not create a construction joint.

   Make construction joints of the type and at the locations shown on the plans. Do not make joints in bridge slabs not shown on the plans unless approved. Additional joints in other members are not permitted without approval. Place authorized additional joints using details equivalent to those shown on the plans for joints in similar locations.

Unless otherwise required, make construction joints square and normal to the forms. Use bulkheads in the forms for all vertical joints.

Thoroughly roughen the top surface of a concrete placement terminating at a horizontal construction joint as soon as practical after initial set is attained.

Thoroughly clean the hardened concrete surface of all loose material, laitance, dirt, and foreign matter, and saturate it with water. Remove all free water and moisten the surface before concrete or bonding grout is placed against it.

Draw forms tight against the existing concrete to avoid mortar loss and offsets at joints.

Coat the joint surface with bonding mortar, grout, epoxy, or other material as indicated in the plans or other Items. Provide Type V epoxy per DMS-6100, "Epoxies and Adhesives," for bonding fresh concrete to hardened concrete. Place the bonding epoxy on a clean, dry surface, and place the fresh concrete while the epoxy is still tacky. Place bonding mortar or grout on a surface that is saturated surface-dry, and place the concrete before the bonding mortar or grout dries. Place other bonding agents in accordance with the manufacturer's recommendations.

8. **Handling and Placing.** Minimize segregation of the concrete and displacement of the reinforcement when handling and placing concrete. Produce a uniform dense compact mass.

   Do not allow concrete to free-fall more than 5 ft. except in the case of drilled shafts, thin walls such as in culverts, or as allowed by other Items. Remove any hardened concrete splatter ahead of the plastic concrete.

   Fill each part of the forms by depositing concrete as near its final position as possible. Do not deposit large quantities at 1 point and run or work the concrete along the forms.

   Deposit concrete in the forms in layers of suitable depth but not more than 36 in. deep unless otherwise permitted.

   Avoid cold joints in a monolithic placement. Sequence successive layers or adjacent portions of concrete so that they can be vibrated into a homogeneous mass with the previously placed concrete before it sets. When re-vibration of the concrete is shown on the plans, allow at most 1 hr. to elapse between adjacent or successive placements of concrete except as otherwise allowed by an approved placing procedure. This time limit may be extended by 1/2 hr. if the concrete contains at least a normal dosage of retarding admixture.

   Use an approved retarding agent to control stress cracks and cold joints in placements where differential settlement and setting time may induce cracking.

9. **Consolidation.** Carefully consolidate concrete and flush mortar to the form surfaces with immersion type vibrators. Do not use vibrators that operate by attachment to forms or reinforcement except where approved on steel forms.

   Vibrate the concrete immediately after deposit. Systematically space points of vibration to ensure complete consolidation and thorough working of the concrete around the reinforcement, embedded fixtures, and into the corners and angles of the forms. Insert the vibrator vertically where possible except for slabs where it may be inserted in a sloping or horizontal position. Vibrate the entire depth of each lift, allowing the vibrator to penetrate several inches into the preceding lift. Do not use the vibrator to move the concrete to other locations in the forms. Do not drag the vibrator through the concrete. Thoroughly consolidate concrete along construction joints by operating the vibrator along and close to but not against the joint surface. Continue the vibration until the concrete surrounding reinforcements and fixtures is completely consolidated. Hand-spade or rod the concrete if necessary to ensure flushing of mortar to the surface of all forms.

10. **Installation of Dowels and Anchor Bolts.** Install dowels and anchor bolts by casting them in-place or by grouting with grout, epoxy, or epoxy mortar unless noted otherwise. Form or drill holes for grouting.

    Drill holes for anchor bolts to accommodate the bolt embedment required by the plans. Make holes for dowels at least 12 in. deep unless otherwise shown on the plans. When using grout or epoxy mortar, make the diameter of the hole at least twice the dowel or bolt diameter, but the hole

need not exceed the dowel or bolt diameter plus 1-1/2 in. When using epoxy, make the hole diameter 1/16 to 1/4 in. greater than the dowel or bolt diameter.

Thoroughly clean holes of all loose material, oil, grease, or other bond-breaking substance, and blow them clean with filtered compressed air. Ensure that holes are in a surface dry condition when epoxy type material is used and in a surface moist condition when hydraulic cement grout is used. Develop and demonstrate for approval a procedure for cleaning and preparing the holes for installation of the dowels and anchor bolts. Completely fill the void between the hole and dowel or bolt with grouting material. Follow exactly the requirements for cleaning outlined in the product specifications for prepackaged systems.

For cast-in-place or grouted systems, provide hydraulic cement grout in accordance with Section 421.2.F, "Mortar and Grout," epoxy, epoxy mortar, or other prepackaged grouts as approved. Provide a Type III epoxy per DMS-6100, "Epoxies and Adhesives," when neat epoxy is used for anchor bolts or dowels. Provide Type VIII epoxy per DMS-6100 when an epoxy grout is used. Provide grout, epoxy, or epoxy mortar as the binding agent unless otherwise indicated on the plans.

Provide other anchor systems as required in the plans.

11. **Placing Concrete in Cold Weather.** Protect concrete placed under weather conditions where weather may adversely affect results. Permission given by the Engineer for placing during cold weather does not relieve the Contractor of responsibility for producing concrete equal in quality to that placed under normal conditions. If concrete placed under poor conditions is unsatisfactory, remove and replace it as directed at Contractor's expense.

    Do not place concrete in contact with any material coated with frost or having a temperature of 32°F or lower. Do not place concrete when the ambient temperature in the shade is below 40°F and falling unless approved. Concrete may be placed when the ambient temperature in the shade is 35°F and rising or above 40°F.

    Provide and install recording thermometers, maturity meters, or other suitable temperature measuring devices to verify that all concrete is effectively protected as follows:

    - Maintain the temperature of the top surface of bridge slabs and top slabs of direct-traffic culverts at 50°F or above for 72 hr. from the time of placement and above 40°F for an additional 72 hr.
    - Maintain the temperature at all surfaces of concrete in bents, piers, culvert walls, retaining walls, parapets, wingwalls, bottoms of bridge slab or culvert top slabs, and other similar formed concrete at 40°F or above for 72 hr. from the time of placement.
    - Maintain the temperature of all other concrete, including the bottom slabs (footings) of culverts, placed on or in the ground above 32°F for 72 hr. from the time of placement.

    Use additional covering, insulated forms, or other means and, if necessary, supplement the covering with artificial heating. Avoid applying heat directly to concrete surfaces. Cure as specified in Section 420.4.J, "Curing Concrete," during this period until all requirements for curing have been satisfied.

    When impending weather conditions indicate the possible need for temperature protection, have on hand all necessary heating and covering material, ready for use, before permission is granted to begin placement.

12. **Placing Concrete in Hot Weather.** Use an approved retarding agent in all concrete for superstructures and top slabs of direct-traffic culverts, except concrete containing GGBF slag, when the temperature of the air is above 85°F unless otherwise directed.

    Keep the concrete at or below the maximum temperature at time of placement as specified in Section 420.4.G.1, "Placing Temperature." Sprinkle and shade aggregate stockpiles or use ice, liquid nitrogen systems, or other approved methods as necessary to control the concrete temperature.

13. **Placing Concrete in Water.** Deposit concrete in water only when shown on the plans or with approval. Make forms or cofferdams tight enough to prevent any water current passing through the

space in which the concrete is being deposited. Do not pump water during the concrete placing or until the concrete has set for at least 36 hr.

Place the concrete with a tremie or pump, or use another approved method, and do not allow it to fall freely through the water or disturb it after it is placed. Keep the concrete surface approximately level during placement.

Support the tremie or operate the pump so that it can be easily moved horizontally to cover all the work area and vertically to control the concrete flow. Submerge the lower end of the tremie or pump hose in the concrete at all times. Use continuous placing operations until the work is complete.

For concrete to be placed under water, design the concrete mix in accordance with Item 421, "Hydraulic Cement Concrete," with a minimum cement content of 650 lb. per cubic yard. Include an anti-washout admixture in the mix design as necessary to produce a satisfactory finished product.

14. **Mass Placements.** Mass placements are defined as placements with a least dimension greater than or equal to 5 ft., or designated on the plans. For monolithic mass placements, develop and obtain approval for a plan to ensure the following during the heat dissipation period:
    - the temperature differential between the central core of the placement and the exposed concrete surface does not exceed 35°F and
    - the temperature at the central core of the placement does not exceed 160°F.

    Base this plan on the equations given in the Portland Cement Association's *Design and Control of Concrete Mixtures*. Cease all mass placement operations and revise the plan as necessary if either of the above limitations is exceeded.

    Include a combination of the following elements in this plan:
    - selection of concrete ingredients including aggregates, gradation, and cement types, to minimize heat of hydration;
    - use of ice or other concrete cooling ingredients;
    - use of liquid nitrogen dosing systems;
    - controlling rate or time of concrete placement;
    - use of insulation or supplemental external heat to control heat loss;
    - use of supplementary cementing materials; or
    - use of a cooling system to control the core temperature.

    Furnish and install 2 sets of temperature recording devices, maturity meters, or other approved equivalent devices at designated locations. Use these devices to simultaneously measure the temperature of the concrete at the core and the surface. Maintain temperature control methods for 4 days unless otherwise approved. Maturity meters may not be used to predict strength of mass concrete.

15. **Placing Concrete in Foundation and Substructure.** Do not place concrete in footings until the depth and character of the foundation has been inspected and permission has been given to proceed.

    Placing of concrete footings upon seal concrete is permitted after the cofferdams are free from water and the seal concrete cleaned. Perform any necessary pumping or bailing during the concreting from a suitable sump located outside the forms.

    Construct or adjust all temporary wales or braces inside cofferdams as the work proceeds to prevent unauthorized construction joints.

    When footings can be placed in a dry excavation without the use of cofferdams, omit forms if approved, and fill the entire excavation with concrete to the elevation of the top of footing.

    Place concrete in columns monolithically between construction joints unless otherwise directed. Columns and caps or tie beams supported on them may be placed in the same operation or separately. If placed in the same operation, allow for settlement and shrinkage of the column concrete by placing it to the lower level of the cap or tie beam, and delay placement between 1 and 2 hr. before proceeding with the cap or tie beam placement.

16. **Placing Concrete in Box Culverts.** Where the top slab and walls are placed monolithically in culverts more than 4 ft. in clear height, allow between 1 and 2 hr. to elapse before placing the top slab to allow for settlement and shrinkage in the wall concrete.

    Accurately finish the footing slab at the proper time to provide a smooth uniform surface. Finish top slabs that carry direct-traffic as specified in this Item. Give top slabs of fill type culverts a float finish.

17. **Placing Concrete in Superstructure.** Unless otherwise shown on the plans, place simple span bridge slabs without transverse construction joints by using either a self-propelled transverse finishing machine or a mechanical longitudinal screed. For small placements or for unusual conditions such as narrow widening, variable cross-slopes, or transitions, use of manually operated screeding equipment may be permitted. Support the screed adequately on a header or rail system stable enough to withstand the longitudinal or lateral thrust of the equipment. Adjust the profile grade line as necessary to account for variations in beam camber and other factors to obtain the required slab thickness and concrete cover over the slab reinforcement. Set beams and verify their surface elevations in a sufficient number of spans so that when adjustment is necessary, the profile grade line can be adjusted over suitable increments to produce a smooth riding surface. Take dead load deflection into account in setting the grades of headers and rail systems. Use construction joints, when required or permitted for slab placements on steel or prestressed concrete beams, as shown on the plans. Before placing concrete on steel girder or truss spans, release falsework under the spans and swing the spans free on their permanent supports.

    Make 1 or more passes with the screed over the bridge slab segment before placing concrete on it to ensure proper operation and maintenance of grades and clearances. Use an approved system of checking to detect any vertical movement of the forms or falsework. Maintain forms for the bottom surface of concrete slabs, girders, and overhangs to the required vertical alignment during concrete placing.

    Fog unformed surfaces of slab concrete in bridge slabs and in top slabs of direct-traffic culverts from the time of initial strikeoff of the concrete until finishing is completed and required interim curing is in place. Do not use fogging as a means to add finishing water, and do not work moisture from the fog spray into the fresh concrete.

    For simple spans, retard the concrete only if necessary to complete finishing operations or as required by this Section. When filling curb forms, bring the top of curb and sidewalk section to the correct camber and alignment, and finish them as described in this Item.

    a. **Transverse Screeding.** Install rails for transverse finishing machines that are supported from the beams or girders so that the supports may be removed without damage to the slab. Prevent bonding between removable supports and the concrete in an acceptable manner. Do not allow rail support parts that remain embedded in the slab to project above the upper mat of reinforcing steel. Rail or screed supports attached to I-beams or girders are subject to the requirements of this Item. Unless otherwise shown on the plans, for transverse screeding the minimum rate of concrete placement is 30 linear feet of bridge slab per hour. Deposit concrete parallel to the skew of the bridge so that all girders are loaded uniformly along their length. Deposit slab concrete between the exterior beam and the adjacent beam before placing concrete in the overhang portion of the slab. Furnish personnel and equipment capable of placing, finishing, and curing the slab at an acceptable rate to ensure compliance with the specifications. Place concrete in transverse strips. On profile grades greater than 1-1/2%, start placement at the lowest end.

    b. **Longitudinal Screeding.** Unless otherwise shown on the plans, use of temporary intermediate headers will be permitted for placements over 50 ft. long if the rate of placement is rapid enough to prevent a cold joint and if these headers are designed for easy removal to permit satisfactory consolidation and finish of the concrete at their locations. Deposit slab concrete between the exterior beam and the adjacent beam before placing concrete in the overhang portion of the slab. Place concrete in longitudinal strips starting at a point in the center of the segment adjacent to 1 side except as this Section indicates, and complete the strip by placing uniformly in both directions toward the ends. For spans on a profile grade of

1-1/2% or more, start placing at the lowest end. Use strips wide enough that the concrete within each strip remains plastic until placement of the adjacent strip. Where monolithic curb construction is specified, place the concrete in proper sequence to be monolithic with the adjacent longitudinal strips of the slabs.

c. **Placements on Continuous Steel Units.** Unless otherwise shown on the plans, place slabs on continuous steel units in a single continuous operation without transverse construction joints using a self-propelled transverse finishing machine or a mechanical longitudinal screed. Retard the initial set of the concrete sufficiently to ensure that concrete remains plastic in at least 3 spans immediately preceding the slab being placed. Use construction joints, when required for slab placements on steel beams or girders, as shown on the plans. When staged placement of a slab is required in the plans, ensure that the previously placed concrete attains a compressive strength of 3,000 psi before placing the next stage concrete. Multiple stages may be placed in a single day if approved. Where plans permit staged placing without specifying a particular order of placement, use an approved placing sequence that will not overstress of any of the supporting members.

d. **Slab and Girder Units.** Unless otherwise shown on the plans, place girders, slab, and curbs of slab and girder spans monolithically. Fill concrete girder stems first, and place the slab concrete within the time limits specified in this Item. If using a transverse screed, place concrete in the stems for a short distance and then place the concrete in transverse strips. If using a longitudinal screed, fill the outside girder stem first, beginning at the low end or side, and continue placement in longitudinal strips.

H. Treatment and Finishing of Horizontal Surfaces Other Than Bridge Slabs. Strike off to grade and finish all unformed upper surfaces. Do not use mortar topping for surfaces constructed under this Section.

After the concrete has been struck off, float the surface with a suitable float. Give bridge sidewalks a wood float or broom finish, or stripe them with a brush.

Slightly slope the tops of caps and piers between bearing areas from the center toward the edge, and slope the tops of abutment and transition bent caps from the backwall to the edge, as directed, so that water drains from the surface. Give the concrete a smooth trowel finish. Construct bearing areas for steel units in accordance with Section 441.3.K.5, “Bearing and Anchorage Devices.” Give the bearing area under the expansion ends of concrete slabs and slab and girder spans a steel-trowel finish to the exact grades required. Give bearing areas under elastomeric bearing pads or nonreinforced bearing seat buildups a textured, wood float finish. Do not allow the bearing area to vary from a level plane more than 1/16 in. in all directions.

Cast bearing seat buildups or pedestals for concrete units integrally with the cap or with a construction joint. Provide a latex-based mortar, an epoxy mortar, or an approved proprietary bearing mortar for bearing seat buildups cast with a construction joint. Mix mortars in accordance with the manufacturer’s recommendations. Construct pedestals of Class C concrete, reinforced as shown on the plans or as indicated in Figure 1 and Figure 2.

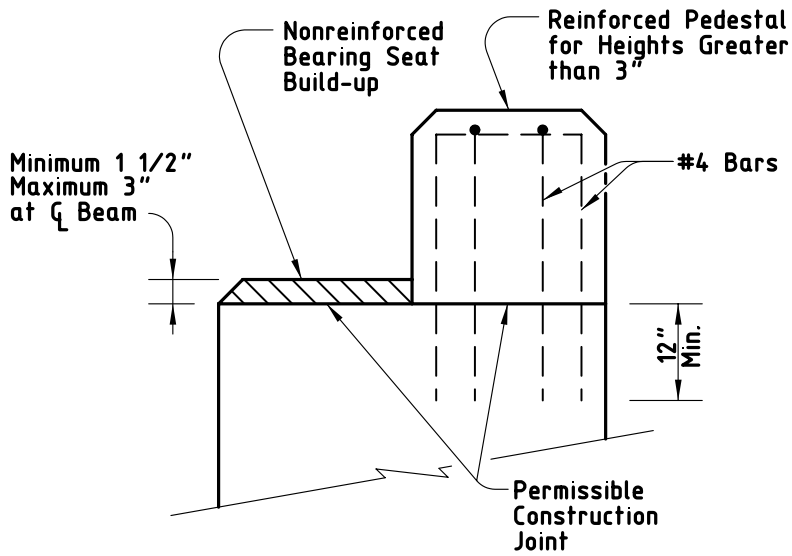

Figure 1
Section through bearing seat buildups.

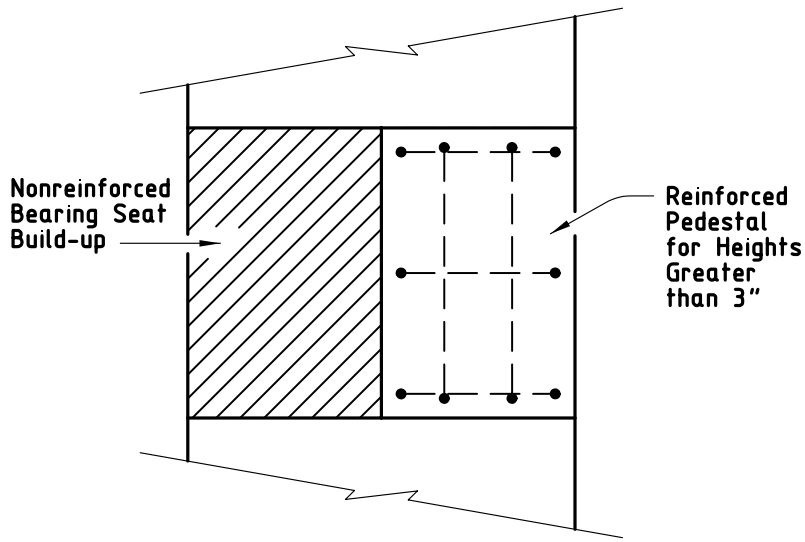

Figure 2
Plan view of bearing seat buildups.

I. Finish of Bridge Slabs. Provide camber for specified vertical curvature and transverse slopes.

For concrete flat slab and concrete slab and girder spans cast in place on falsework, provide additional camber to offset the initial and final deflections of the span as indicated in the plans. For concrete slab and girder spans using pan forms, provide camber of approximately 3/8 in. for 30-ft. spans and 1/2 in. for 40-ft. spans to offset initial and final deflections unless otherwise directed. For concrete flat slab

and concrete slab and girder spans not using pan forms, when dead load deflection is not shown on the plans, provide a camber of 1/8 in. per 10 ft. of span length but no more than 1/2 in.

Provide a camber of 1/4 in. in addition to deflection for slabs without vertical curvature on steel or prestressed concrete beams.

Use work bridges or other suitable facilities to perform all finishing operations and to provide access, if necessary, for the Engineer to check measurements for slab thickness and reinforcement cover.

As soon as the concrete has been placed and vibrated in a section wide enough to permit working, level, strike off, and screed the surface, carrying a slight excess of concrete ahead of the screed to fill all low spots.

Move longitudinal screeds across the concrete with a saw-like motion while their ends rest on headers or templates set true to the roadway grade or on the adjacent finished slab. Move transverse screeds longitudinally approximately 1/5 of the drum length for each complete out-and-back pass of the carriage.

Screed the surface of the concrete enough times and at intervals to produce a uniform surface true to grade and free of voids.

Work the screeded surface to a smooth finish with a long-handled wood or metal float or hand-float it from work bridges over the slab. Floating may not be necessary if the pan float attached to a transverse screed produces an acceptable finish. Avoid overworking the surface of the concrete. Avoid overuse of finish water.

Perform sufficient checks, witnessed by the Engineer, with a long-handled 16-ft. straightedge on the plastic concrete to ensure that the final surface will be within specified tolerances. Make the check with the straightedge parallel to the centerline. Lap each pass half over the preceding pass. Remove all high spots, and fill and float all depressions over 1/16 in. deep with fresh concrete. Continue checking and floating until the surface is true to grade and free of depressions, high spots, voids, or rough spots. Fill screed-rail support holes with concrete, and finish them to match the top of the slab.

Finish the concrete surface to a uniform texture using a carpet drag, burlap drag, or broom finish. Finish the surface to a smooth sandy texture without blemishes, marks, or scratches deeper than 1/16 in. Apply the surface texturing using a work bridge or platform immediately after completing the straightedge checks. Draw the carpet or burlap drag longitudinally along the concrete surface, adjusting the surface contact area or pressure to provide a satisfactory coarsely textured surface. A broom finish may be performed using a fine bristle broom transversely.

Coat the concrete surface immediately after the carpet or burlap drag, or broom finish with a single application of evaporation retardant at a rate recommended by the manufacturer. Do not allow more than 10 min. to elapse between the texturing at any location and application of evaporation retardant. The evaporation retardant may be applied using the same work bridge used for surface texturing. Do not work the concrete surface once the evaporation retardant has been applied.

Apply interim and final curing in accordance with Section 420.4.J, “Curing Concrete.”

The Contractor is responsible for the ride quality of the finished bridge slab. The Engineer will use a 10-ft. straightedge (1/8 in. in 10 ft.) to verify ride quality and to determine locations where corrections are needed. If the Engineer determines that the ride quality is unacceptable, submit a plan for approval to produce a ride of acceptable quality. Make all corrections for ride before saw-cutting grooves.

Saw-cut grooves in the hardened concrete of bridge slabs, bridge approach slabs, and direct-traffic culverts to produce the final texturing after completion of the required curing period. Cut grooves perpendicular to the structure centerline. Cut grooves continuously across the slab to within 18 in. of the barrier rail, curb, or median divider. At skewed metal expansion joints in bridge slabs, adjust groove cutting by using narrow-width cutting heads so that all grooves end within 6 in. of the joint, measured perpendicular to the centerline of the metal joint. Leave no ungrooved surface wider than 6 in. adjacent to either side of the joint. Ensure that the minimum distance to the first groove, measured perpendicular to the edge of the concrete joint or from the junction between the concrete and the metal leg of the joint, is 1 in. Cut grooves continuously across construction joints or other joints in the concrete that are less than 1/2 in. wide. Apply the same procedure described above where barrier rails, curbs, or median dividers are not parallel to the structure centerline to maintain the 18-in. maximum

dimension from the end of the grooves to the gutter line. Cut grooves continuously across formed concrete joints.

When the plans call for a concrete overlay to be placed on the slab (new construction) or on prestressed concrete box beams or other precast elements, give a carpet drag, burlap drag, or broom finish to all concrete surfaces to be overlaid. Saw-grooving is not required in this case. Provide an average texture depth for the finish of approximately 0.035 in. with no individual test falling below 0.020 in., unless otherwise shown on the plans, when tested in accordance with Tex-436-A. If the texture depth falls below what is intended, revise finishing procedures to produce the desired texture.

When the plans require an asphalt seal, with or without overlay, on the slab (new construction), on prestressed concrete box beams, or on other precast elements, give all concrete surfaces to be covered a lightly textured broom or carpet drag finish. Provide an average texture depth of approximately 0.025 in. when tested in accordance with Tex-436-A.

J. Curing Concrete. Obtain approval of the proposed curing methods, equipment, and materials before placing concrete. The Engineer may require the same curing methods for like portions of a single structure. Inadequate curing or facilities may delay all concrete placement on the job until remedial action is taken.

A curing day is a calendar day when the temperature, taken in the shade away from artificial heat, is above 50°F for at least 19 hr. or, on colder days if the temperature of all surfaces of the concrete is maintained above 40°F, for the entire 24 hr. The required curing period begins when all concrete has attained its initial set. Tex-440-A may be used to determine when the concrete has attained its initial set.

Cure all concrete for 4 consecutive days except as noted in Table 1.

Table 1
Exceptions to 4-Day Curing

Description	Type of Cement	Required Curing Days
Upper surfaces of bridge slabs, top slab of direct-traffic culverts, and concrete overlays	I or III	8
	II or I/II	10
	All types with supplementary cementing materials	10
Concrete piling buildups	All	6

For upper surfaces of bridge slabs, bridge approach slabs, median and sidewalk slabs, and culvert top slabs constructed using Class S concrete, apply interim curing using a Type 1-D curing compound as soon as possible after application of the evaporation retardant and after the water sheen has disappeared, but no more than 45 min. after application of the evaporation retardant. Apply membrane interim curing using a work bridge or other approved apparatus to ensure a uniform application. Water-cure for final curing in accordance with this Section, starting as soon as possible without damaging the surface finish. Maintain the water curing for the duration noted in Table 1. Place polyethylene sheeting, burlap-polyethylene blankets, laminated mats, or insulating curing mats in direct contact with the slab when the air temperature is expected to drop below 40°F during the first 72 hr. of the curing period. Weigh down these curing materials with dry mats to maintain direct contact with the concrete and to provide insulation against cold weather. Supplemental heating or insulation may be required in cold and wet weather if the insulating cotton mats become wet or if the concrete drops below the specified curing temperature. Avoid applying heat directly to concrete surfaces.

For the top surface of any concrete unit upon which concrete is to be placed and bonded at a later interval (stub walls, risers, etc.) and other superstructure concrete (curbs, wingwalls, parapet walls, etc.), use only water curing in accordance with this Section.

Cure all other concrete as specified in the pertinent Items. Use the following methods for curing concrete, subject to the requirements of this Item.

1. **Form Curing.** When forms are left in intimate contact with the concrete, other curing methods are not required except for exposed surfaces and for cold weather protection. If forms are removed before the 4-day required curing period, use another approved curing method.
2. **Water Curing.** Keep all exposed surfaces of the concrete wet continuously for the required curing time. Use water curing that meets the requirements for concrete mixing water in Section 421.2.D, "Water." Do not use seawater or water that stains or leaves an unsightly residue.
   a. **Wet Mats.** Keep the concrete continuously wet by maintaining wet cotton mats in direct contact with the concrete for the required curing time. If needed, place damp burlap blankets made from 9-oz. stock on the damp concrete surface for temporary protection before applying cotton mats. Then place the dry mats and wet them immediately after they are placed. Weight the mats adequately to provide continuous contact with all concrete. Cover surfaces that cannot be cured by direct contact with mats, forming an enclosure well anchored to the forms or ground so that outside air cannot enter the enclosure. Provide sufficient moisture inside the enclosure to keep all surfaces of the concrete wet.
   b. **Water Spray.** Overlap sprays or sprinklers to keep all unformed surfaces continuously wet.
   c. **Ponding.** Cover the surfaces with at least 2 in. of clean granular material, kept wet at all times, or at least 1 in. deep water. Use a dam to retain the water or saturated granular material.
3. **Membrane Curing.** Unless otherwise shown on the plans, choose either Type 1-D or Type 2 membrane-curing compound when membrane curing is permitted. Type 1-D (Resin Base Only) is required for interim curing bridge slabs and top slabs of direct-traffic culverts and all other surfaces that require a higher grade of surface finish. For substructure concrete provide only 1 type of curing compound on any 1 structure.

   Apply membrane curing just after free moisture has disappeared at a rate of approximately 180 sq. ft. per gallon. Do not spray curing compound on projecting reinforcing steel or concrete that will later form a construction joint. Do not apply membrane curing to dry surfaces. Dampen formed surfaces and surfaces that have been given a first rub so that they are moist at the time of application of the membrane.

   When membrane is used for complete curing, leave the film unbroken for the minimum curing period specified. Correct damaged membrane immediately by reapplication of membrane. Polyethylene sheeting, burlap-polyethylene mats, or laminated mats in close contact with the concrete surfaces are equivalent to membrane curing.

K. Removal of Forms and Falsework. Unless otherwise directed, forms for vertical surfaces may be removed after the concrete has aged 12 hr. after initial set provided the removal can be done without damage to the concrete. Keep forms for mass placements, defined in Section 420.4.G.14, "Mass Placements," in place for 4 days following concrete placement.

Remove forms for inside curb faces and for bridge rails whenever removal can be done without damage to the curb or railing.

Leave in place weight-supporting forms and falsework spanning more than 1 ft. for all bridge components and culvert slabs except as directed otherwise until the concrete has attained a compressive strength of 2,500 psi. Remove forms for other structural components as necessary.

Remove inside forms (walls and top slabs) for box culverts and sewers after concrete has attained a compressive strength of 1,800 psi if an approved overhead support system is used to transfer the weight of the top slab to the walls of the box culvert or sewer before removal of the support provided by the forms.

Forms or parts of forms may be removed only if constructed to permit removal without disturbing forms or falsework required to be left in place for a longer period on other portions of the structure.

Remove all metal appliances used inside forms for alignment to a depth of at least 1/2 in. from the concrete surface. Make the appliances so that metal may be removed without undue chipping or spalling of the concrete, and so that it leaves a smooth opening in the concrete surface when removed. Do not burn off rods, bolts, or ties.

Remove all forms and falsework unless otherwise directed.

L. Defective Work. Repair defective work as soon as possible. Remove and replace at the expense of the Contractor any defect that cannot be repaired to the satisfaction of the Engineer.

M. Ordinary Surface Finish. Apply an ordinary surface finish to all concrete surfaces as follows:

- Chip away all loose or broken material to sound concrete where porous, spalled, or honeycombed areas are visible after form removal.
- Repair spalls by saw-cutting and chipping at least 1/2 in. deep, perpendicular to the surface to eliminate feather edges. Repair shallow cavities using a latex adhesive grout, cement mortar, or epoxy mortar as approved. Repair large areas using concrete as directed or approved.
- Clean and fill holes or spalls caused by the removal of form ties, etc., with latex grout, cement grout, or epoxy grout as approved. Fill only the holes. Do not blend the patch with the surrounding concrete. On surfaces to receive a rub finish in accordance with Item 427, "Surface Finishes for Concrete," chip out exposed parts of metals chairs to a depth of 1/2 in. and repair the surface.
- Remove all fins, runs, drips, or mortar from surfaces that will be exposed. Smooth all form marks and chamfer edges by grinding or dry-rubbing.
- Ensure that all repairs are dense, well bonded, and properly cured. Finish exposed large repairs to blend with the surrounding concrete where a higher class of finish is not specified.

Unless noted otherwise, apply an ordinary surface finish as the final finish to the following exposed surfaces:

- inside and top of inlets,
- inside and top of manholes,
- inside of sewer appurtenances,
- inside of culvert barrels,
- bottom of bridge slabs between girders or beams, and
- vertical and bottom surfaces of interior concrete beams or girders.

Form marks and chamfer edges do not need to be smoothed for the inside of culvert barrels and the bottom of bridge slabs between girders or beams.

420.5. Measurement. This Item will be measured by the cubic yard, square yard, foot, square foot, or by each structure.

A. General. Concrete quantities will be based on the dimensions shown on the plans or those established in writing by the Engineer.

In determining quantities, no deductions will be made for chamfers less than 2 in. or for embedded portions of steel or prestressed concrete beams, piling, anchor bolts, reinforcing steel, drains, weep holes, junction boxes, electrical or telephone conduit, ducts and voids for prestressed tendons, or embedded portions of light fixtures.

For slab and girder spans using pan forms, a quantity will be included for the screed setting required to provide proper camber in the roadway surface after form removal.

For slabs on steel or prestressed concrete beams, an estimated quantity for the haunch between the slab and beams will be included. No measurement will be made during construction for variation in the amount of haunch concrete due to variations in camber of the beams.

For cast-in-place slabs on slab beams, double-T beams, or box beams, the combination of span length, theoretical camber in beams, computed deflections, and plan vertical curve will be taken into account in determining the quantity for the slab.

Additional concrete that may be required by an adjustment of the profile grade line during construction, to insure proper slab thickness, will not be measured for payment.

Variation in concrete headwall quantity incurred when an alternate bid for pipe is permitted will not be cause for payment adjustment.

Mass placements may be either a plans quantity item or measured in place as indicated.

Quantities revised by a change in design, measured as specified, will be increased or decreased and included for payment.

B. Plans Quantity. Structure elements designated in Table 2 and measured by the cubic yard are plans quantity measurement items. The quantity to be paid for plans quantity items is the quantity shown in the proposal unless modified by Article 9.2, "Plans Quantity Measurement." Additional measurements or calculations will be made if adjustments of quantities are required.

No adjustment will be made for footings or other in-ground elements where the Contractor has been allowed to place concrete in an excavation without forms.

Table 2
Plans Quantity Payment
(Cubic Yard Measurement Only)

Culverts and culvert wing walls	Abutments
Headwalls for pipe	Slab and girder spans (pan form)
Retaining walls	Footings
Inlets and manholes	Pile bent caps
Shear key concrete for box and slab beams	Concrete wearing surface on pre-cast box beams, slab beams or double-T beams
Bridge approach slabs	Cast-in-place concrete slab spans

Note: Other structure elements, including pier and bent concrete, may be paid for as "plans quantity" when shown on the plans.

C. Measured in Place. Items not paid for as "plans quantity" will be measured in place.

420.6. Payment. The work performed and materials furnished in accordance with this Item and measured as provided under "Measurement" will be paid for at the unit price bid for the various structure elements specified of the various classes of concrete. Mass placements, as defined in Section 420.4.G.14, "Mass Placements," will be paid for separately for the various classes of concrete. This price is full compensation for furnishing, hauling, and mixing concrete materials; furnishing, bending, fabricating, splicing, welding and placing the required reinforcement; clips, blocks, metal spacers, ties, wire, or other materials used for fastening reinforcement in place; placing, finishing, curing, and grooving concrete; applying ordinary surface finish; furnishing and placing drains, metal flashing strips, and expansion-joint material; excavation, subgrade preparation, and disposal of excavated material for bridge approach slabs; and forms and falsework, equipment, labor, tools, and incidentals.

Diaphragm concrete will not be paid for directly but is subsidiary to the slab unless otherwise shown on the plans.

Design and installation of foundations for falsework is at the Contractor's expense.

The following procedure will be used to evaluate concrete where 1 or more project acceptance test specimens fail to meet the required design strength specified in Item 421, "Hydraulic Cement Concrete," or in the plans:

- The concrete for a given placement will be considered structurally adequate and accepted at full price if the average of all test results for specimens made at the time of placement meets the required design strength provided that no single test result is less than 85% of the required design strength.
- The Engineer will perform a structural review of the concrete to determine its adequacy to remain in service if the average of all test results for specimens made at the time of placement is less than the required design strength or if any test results are less than 85% of the required design strength. If cores are required to determine the strength of the in-situ concrete, take cores at locations designated by the Engineer in accordance with Tex-424-A. The coring and testing of the cores will be at the Contractor's expense. The Engineer will test the cores.
- If all of the tested cores meet the required design strength, the concrete will be paid for at the full price.
- If any of the tested cores do not meet the required design strength but the average strength attained is determined to be structurally adequate, the Engineer will determine the limits of the pay adjustment. The average strength of the cores tested will be used in the pay adjustment formula.
- Remove concrete that is not structurally adequate.
- Concrete that has been determined to be structurally adequate may be accepted at an adjusted price based on the following formula:

$A = 0.10Bp + 0.75(Sa/Ss)^2 Bp$

where:

A = Amount to be paid per unit of measure for the entire placement in question
Sa = Actual strength from cylinders or cores. Use values from cores, if taken.
Ss = Minimum required strength (specified)
Bp = Unit bid price.

- The decision to reject structurally inadequate concrete or to apply the pay adjustment will be made no later than 56 days after placement.

ITEM 421

HYDRAULIC CEMENT CONCRETE

421.1. Description. Furnish hydraulic cement concrete for concrete pavements, concrete structures, and other concrete construction.

421.2. Materials.

A. Cement. Furnish cement conforming to DMS-4600, "Hydraulic Cement."

B. Supplementary Cementing Materials (SCM).

1. **Fly Ash.** Furnish fly ash conforming to DMS-4610, "Fly Ash."
2. **Ultra-Fine Fly Ash (UFFA).** Furnish UFFA conforming to DMS-4610, "Fly Ash."
3. **Ground Granulated Blast-Furnace Slag (GGBFS).** Furnish GGBFS conforming to DMS-4620, "Ground Granulated Blast-Furnace Slag," Grade 100 or 120.
4. **Silica Fume.** Furnish silica fume conforming to DMS-4630, "Silica Fume."
5. **Metakaolin.** Furnish metakaolin conforming to DMS-4635, "Metakaolin."

C. Chemical Admixtures. Furnish admixtures conforming to DMS-4640, "Chemical Admixtures for Concrete." Do not use calcium chloride.

D. Water. Furnish mixing and curing water that is free from oils, acids, organic matter, or other deleterious substances. Water from municipal supplies approved by the Texas Department of Health will not require testing. When using water from other sources, provide test reports showing compliance with Table 1 before use.

Water that is a blend of concrete wash water and other acceptable water sources, certified by the concrete producer as complying with the requirements of both Table 1 and Table 2, may be used as mix water. Test the blended water weekly for 4 weeks for compliance with Table 1 and Table 2 or provide previous test results. Then test every month for compliance. Provide water test results upon request.

Table 1
Chemical Limits for Mix Water

Contaminant	Test Method	Maximum Concentration (ppm)
Chloride (Cl)	ASTM D 512	
Prestressed concrete		500
Bridge decks & superstructure		500
All other concrete		1,000
Sulfate (SO_4)	ASTM D 516	1,000
Alkalies ($Na_2O + 0.658K_2O$)	ASTM D 4191 & ASTM D 4192	600
Total solids	AASHTO T 26	50,000

Table 2
Acceptance Criteria for Questionable Water Supplies

Property	Test Method	Limits
Compressive strength, min % control at 7 days	ASTM C 109[1]	90
Time of set, deviation from control, Min.	ASTM C 191[1]	from 60 early to 90 later

1. Base comparisons on fixed proportions and the same volume of test water compared to the control mix using city water or distilled water.

Do not use mix water that has an adverse effect on the air-entraining agent, on any other chemical admixture, or on strength or time of set of the concrete. When using white hydraulic cement, use mixing and curing water free of iron and other impurities that may cause staining or discoloration.

E. Aggregate. Supply aggregates that meet the definitions in Tex-100-E. Provide coarse and fine aggregates from sources listed in the Department's Concrete Rated Source Quality Catalog (CRSQC). Provide aggregate from non-listed sources only when tested and approved by the Engineer before use. Allow 30 calendar days for the Engineer to sample, test, and report results for non-listed sources. Do not combine approved material with unapproved material.

1. **Coarse Aggregate.** Provide coarse aggregate consisting of durable particles of gravel, crushed blast furnace slag, recycled crushed hydraulic cement concrete, crushed stone, or combinations thereof that are free from frozen material and from injurious amounts of salt, alkali, vegetable matter, or other objectionable material, either free or as an adherent coating. Provide coarse aggregate of uniform quality throughout.

   Provide coarse aggregate that, when tested in accordance with Tex-413-A, has:
   - at most 0.25% by weight of clay lumps,
   - at most 1.0% by weight of shale, and
   - at most 5.0% by weight of laminated and friable particles.

   Wear must not be more than 40% when tested in accordance with Tex-410-A.

   Unless otherwise shown on the plans, provide coarse aggregate with a 5-cycle magnesium sulfate soundness of not more than 18% when tested in accordance with Tex-411-A. Crushed recycled hydraulic cement concrete is not subject to the 5-cycle soundness test.

   The loss by decantation as tested in accordance with Tex-406-A, plus the allowable weight of clay lumps, must not exceed 1.0% or the value shown on the plans, whichever is smaller. In the case of aggregates made primarily from crushing stone, if the material finer than the No. 200 sieve is established to be the dust of fracture and essentially free from clay or shale as established by Tex-406-A, Part III, the limit may be increased to 1.5%. When crushed limestone coarse aggregate is used in concrete pavements, the decant may exceed 1.0% but not more than 3.0% if the material finer than the No. 200 sieve is determined to be at least 67% calcium carbonate in accordance with Tex-406-A, Part III.

   Unless otherwise specified, provide aggregate conforming to the gradation requirements shown in Table 3 when tested in accordance with Tex-401-A.

Table 3
Coarse Aggregate Gradation Chart

Aggregate Grade No.[1]	Nominal Size	Percent Passing on Each Sieve								
		2-1/2"	2"	1-1/2"	1"	3/4"	1/2"	3/8"	No. 4	No. 8
1	2"	100	80–100	50–85		20–40			0–5	
2 (467)	1–1/2"		100	95–100		35–70		10–30	0–5	
3	1–1/2"		100	95–100		60–90	25–60		0–5	
4 (57)	1"			100	95–100		25–60		0–10	0–5
5 (67)	3/4"				100	90–100		20–55	0–10	0–5
6 (7)	1/2"					100	90–100	40–70	0–15	0–5
7	3/8"						100	70–95	0–25	
8	3/8"						100	95–100	20–65	0–10

1. Corresponding ASTM C 33 gradation shown in parentheses.

2. **Fine Aggregate.** Provide fine aggregate consisting of clean, hard, durable particles of natural or manufactured sand or a combination thereof with or without mineral filler. Provide fine aggregate free from frozen material and from injurious amounts of salt, alkali, vegetable matter, or other objectionable material, and containing no more than 0.5% clay lumps by weight in accordance with Tex-413-A.

   Provide fine aggregate that does not show a color darker than standard when subjected to the color test for organic impurities in accordance with Tex-408-A.

Unless otherwise shown on the plans, use fine aggregate with an acid insoluble residue of at least 60% by weight when tested in accordance with Tex-612-J in all concrete subject to direct traffic.

Unless otherwise shown on the plans, when necessary, blend the fine aggregate to meet the acid insoluble residue requirement. When blending, use the following equation:

Acid Insoluble (%) = $\{(A1)(P1)+(A2)(P2)\}/100$

where:

$A1$ = acid insoluble (%) of aggregate 1
$A2$ = acid insoluble (%) of aggregate 2
$P1$ = percent by weight of $A1$ of the fine aggregate blend
$P2$ = percent by weight of $A2$ of the fine aggregate blend

Provide fine aggregate or combinations of aggregates, including mineral filler, conforming to the gradation requirements shown in Table 4 when tested in accordance with Tex-401-A unless otherwise specified.

Table 4
Fine Aggregate Gradation Chart (Grade 1)

Sieve Size	Percent Passing
3/8 in.	100
No. 4	95–100
No. 8	80–100
No. 16	50–85
No. 30	25–65
No. 50	10–35[1]
No. 100	0–10
No. 200	0–3[2]

1. 6–35 when sand equivalent value is greater than 85.
2. 0–6 for manufactured sand.

Unless otherwise shown on the plans, provide fine aggregate with a sand equivalent of at least 80 in accordance with Tex-203-F.

For all classes of concrete except Class K, provide fine aggregate with a fineness modulus between 2.30 and 3.10 as determined by Tex-402-A. For Class K concrete, provide a fine aggregate with a fineness modulus between 2.60 to 2.80 unless otherwise shown on the plans.

3. **Mineral Filler.** Provide mineral filler consisting of stone dust, clean crushed sand, or other approved inert material with 100% passing the No. 30 sieve and 65 to 100% passing the No. 200 sieve when tested in accordance with Tex-401-A.

F. Mortar and Grout. When required or shown on the plans, provide mortar and grout consisting of 1 part hydraulic cement, 2 parts sand, and sufficient water to provide the desired consistency. Provide mortar with a consistency such that the mortar can be easily handled and spread by trowel. Provide grout of a consistency that will flow into and completely fill all voids.

421.3. Equipment.

A. Concrete Plants and Mixing Equipment. Except for volumetric mixers (auger/mixer), each plant and truck mixer must be currently certified by the National Ready Mixed Concrete Association (NRMCA) or have an inspection report signed and sealed by a licensed professional engineer showing that concrete measuring, mixing, and delivery equipment meets all requirements of ASTM C 94. A new certification or signed and sealed report is required every time a plant is moved. Plants with a licensed engineer's inspection require reinspection every 2 years. Provide a copy of the certification or the signed and sealed inspection report to the Engineer. When equipment or facilities fail to meet specification requirements, remove them from service until corrected.

1. **Scales.** Check all scales prior to beginning of operations, after each move, or whenever their accuracy or adequacy is questioned, and at least once every 6 mo. Immediately correct deficiencies, and recalibrate. Provide a record of calibration showing scales in compliance with

ASTM C 94 requirements. Check batching accuracy of volumetric water batching devices and admixture dispensing devices at least every 90 days. Perform daily checks as necessary to ensure measuring accuracy.

2. **Volumetric Mixers.** Provide volumetric mixers with rating plates defining the capacity and the performance of the mixer in accordance with the Volumetric Mixer Manufacturers Bureau or equivalent. Provide volumetric mixers that comply with ASTM C 685. Provide test data showing mixers meet the uniformity test requirements of Tex-472-A.

3. **Agitators and Truck and Stationary Mixers.** Inspect and furnish inspection reports on truck mixers and agitators annually. If an inspection within 12 mo. is not practical, a 2-mo. grace period (for a maximum of 14 mo. between inspections) is permitted. Include in the report the condition of blades and fins and their percent wear from the original manufacturer's design. Repair mixing equipment exhibiting 10% or more wear before use. Provide truck mixers and agitators equipped with means to readily verify the number of revolutions of the drum, blades, or paddles.

   Provide stationary and truck mixers capable of combining the ingredients of the concrete within the specified time or the number of revolutions specified into a thoroughly mixed and uniform mass and capable of discharging the concrete so that at least 5 of the 6 requirements of Tex-472-A are met.

   As directed, to resolve issues of mix uniformity and mixer performance, perform concrete uniformity tests on mixers or agitators in accordance with Tex-472-A.

   Perform the mixer or agitator uniformity test at the full rated capacity of the equipment and within the maximum mixing time or maximum number of revolutions. Remove from service all equipment that fails the uniformity test.

   Inspect and maintain mixers and agitators. Keep them reasonably free of concrete buildup, and repair or replace worn or damaged blades or fins.

   Ensure all mixers have a plate affixed showing manufacturer's recommended operating speed and rated capacity for mixing and agitating.

B. Hauling Equipment. Provide hauling equipment capable of maintaining the mixed concrete in a thoroughly mixed and uniform mass and of discharging the concrete with a satisfactory degree of uniformity.

When using non-agitating equipment for transporting concrete, provide equipment with smooth, mortar-tight metal containers equipped with gates that prevent accidental discharge of the concrete.

C. Testing Equipment. Unless otherwise shown on the plans or specified, in accordance with the pertinent test procedure, furnish and maintain:

- test molds,
- curing facilities,
- maturity meters if used, and
- wheelbarrow or other container acceptable for the sampling of the concrete.

Provide strength-testing equipment in accordance with the Contract controlling test unless shown otherwise.

421.4. Construction.

A. Classification and Mix Design. Furnish mix designs using ACI 211, "Standard Practice for Selecting Proportions for Normal, Heavyweight, and Mass Concrete," or other approved procedures for the classes of concrete required in accordance with Table 5. Do not exceed the maximum water-to-cementitious-material ratio.

A higher-strength class of concrete with equal or lower water-to-cementitious-material ratio may be substituted for the specified class of concrete.

To account for production variability and ensure minimum compressive strength requirements are met, over-design the mix in accordance with Table 6.

1. **Cementitious Materials.** Use cementitious materials from prequalified sources; otherwise, request sampling and testing for approval before use. Unless otherwise specified or approved,

limit cementitious material content to no more than 700 lb. per cubic yard. When supplementary cementing materials are used, "cement" is defined as "cement plus supplementary cementing material."

Use Type III cement only in precast concrete or when specified or permitted.

For monolithic placements, use cement of the same type and from the same source.

When sulfate-resistant concrete is required, use mix design options 1, 2, 3, or 4 given in Section 421.4.A.6, "Mix Design Options," using Type I/II, II, V, IP, or IS cement. Do not use Class C fly ash in sulfate-resistant concrete.

Do not use supplementary cementing materials when white hydraulic cement is specified.

Table 5
Concrete Classes

Class of Concrete	Design Strength, Min. 28-day f'_c (psi)	Maximum W/C Ratio[1]	Coarse Aggregate Grades[2,3]	General Usage[4]
A	3,000	0.60	1–4, 8	Inlets, manholes, curb, gutter, curb & gutter, conc. retards, sidewalks, driveways, backup walls, anchors
B	2,000	0.60	2–7	Riprap, small roadside signs, and anchors
C[5]	3,600	0.45	1–6	Drilled shafts, bridge substructure, bridge railing, culverts except top slab of direct traffic culverts, headwalls, wing walls, approach slabs, concrete traffic barrier (cast-in-place)
D	1,500	0.60	2–7	Riprap
E	3,000	0.50	2–5	Seal concrete
F[5]	Note 6	0.45	2–5	Railroad structures; occasionally for bridge piers, columns, or bents
H[5]	Note 6	0.45	3–6	Prestressed concrete beams, boxes, piling, and concrete traffic barrier (precast)
S[5]	4,000	0.45	2–5	Bridge slabs, top slabs of direct traffic culverts
P	See Item 360	0.45	2–3	Concrete pavement
DC[5]	5,500	0.40	6	Dense conc. overlay
CO[5]	4,600	0.40	6	Conc. overlay
LMC[5]	4,000	0.40	6–8	Latex-modified concrete overlay
SS[5]	Note 7	0.45	4–6	Slurry displacement shafts, underwater drilled shafts
K[5]	Note 6	0.45	Note 6	Note 6
HES	Note 6	0.45	Note 6	Note 6

1. Maximum water-cement or water-cementitious ratio by weight.
2. Unless otherwise permitted, do not use Grade 1 coarse aggregate except in massive foundations with 4-in. minimum clear spacing between reinforcing steel bars. Do not use Grade 1 aggregate in drilled shafts.
3. Unless otherwise approved, use Grade 8 aggregate in extruded curbs.
4. For information only.
5. Structural concrete classes.
6. As shown on the plans or specified.
7. Cementitious material content shall be minimum 658 lb/cy of concrete.

Table 6
Over Design to Meet Compressive Strength Requirements[1]

No. of Tests[2,3]	Standard Deviation, psi				
	300	400	500	600	700
15	470	620	850	1,120	1,390
20	430	580	760	1,010	1,260
30 or more	400	530	670	900	1,130

1. When designing the mix, add the tabulated amounts to the minimum design strength in Table 5.
2. Number of tests of a concrete mixture used to estimate the standard deviation of a concrete production facility. Test of another mix within 1,000 psi of the specified strength may be used.
3. If less than 15 prior tests are available, the overdesign should be 1,000 psi for specified strength less than 3,000 psi, 1,200 psi for specified strengths from 3,000 to 5,000 psi and 1,400 psi for specified strengths greater than 5,000 psi.

2. **Aggregates.** Limit the use of recycled crushed hydraulic cement concrete as a coarse or fine aggregate to Class A, B, D, E, and P concrete. Limit recycled crushed concrete fine aggregate to a maximum of 20% of the fine aggregate.

   When white hydraulic cement is specified, use light-colored aggregates.

3. **Chemical Admixtures.** Use only preapproved concrete chemical admixtures from the list of prequalified concrete admixtures maintained by the Construction Division. Submit non-preapproved admixtures for testing to the Engineer for approval. Do not use high-range water-reducing admixtures (Type F or G) or accelerating admixtures (Type C or E) in bridge deck concrete.

4. **Air Entrainment.** Air-entrain all concrete except for Class B in accordance with Table 7 unless otherwise shown on the plans. Use moderate exposure values unless otherwise specified. If the air content is more than 1-1/2 percentage points below or 3 percentage points above the required air, the load of concrete will be rejected. If the air content is more than 1-1/2 but less than 3 percentage points above the required air, the concrete may be accepted based on strength tests.

Table 7
Air Entrainment

Nominal Maximum Aggregate Size, in.	% Air[1]	
	Moderate Exposure	Severe Exposure
3/8 (Grades 7 & 8)	6	7-1/2
1/2 (Grade 6)	5-1/2	7
3/4 (Grade 5)	5	6
1 (Grade 4)	4-1/2	6
1-1/2 (Grades 2 & 3)	4-1/2	5-1/2
2 (Grade 1)	4	5

1. For specified concrete strengths above 5,000 psi a reduction of 1 percentage point is permitted.

5. **Slump.** Unless otherwise specified, provide concrete slump in accordance with Table 8 using the lowest slump possible that can be placed and finished efficiently without segregation or honeycombing.

   Concrete that exceeds the maximum acceptable placement slump at time of delivery will be rejected.

   When approved, the slump of a given concrete mix may be increased above the values shown in Table 8 using chemical admixtures, provided that the admixture-treated concrete has the same or lower water–cement or water–cementitious-material ratio and does not exhibit segregation or excessive bleeding. Request approval for the mix design sufficiently in advance for proper evaluation by the Engineer.

Table 8
Slump Requirements

Concrete Designation	Recommended Design and Placement Slump, in.	Maximum Acceptable Placement Slump, in.
Drilled shafts	See Item 416	See Item 416
Thin walled section (9 in. or less)	4	6-1/2
Approach slabs, concrete overlays, caps, columns, piers, wall sections (over 9 in.)	3	5
Bridge slabs	4	5-1/2
Prestressed concrete members[1]	4	6-1/2
Concrete traffic barrier, concrete bridge railing	4	6-1/2
Dense concrete overlay	3/4	2
Latex-modified conc. for bridge deck overlays	3	7-1/2
Concrete placed underwater	6	8-1/2
Concrete pavement (slip-formed)	1-1/2	3
Concrete pavement (formed)	4	6-1/2
Riprap, curb, gutter, slip-formed, and extruded concrete	As approved	As approved

1. If a high-range water reducer (HRWR) is used, maximum acceptable placement slump will be 9 in.

6. **Mix Design Options.** For structural concrete identified in Table 5 and any other class of concrete designed using more than 520 lb. of cementitious material per cubic yard, use one of the mix design Options 1–8 shown below.

   For concrete classes not identified as structural concrete and designed using less than 520 lb. of cementitious material per cubic yard, use one of the mix design Options 1–8 shown in Table 5, except that Class C fly ash may be used instead of Class F fly ash for Options 1, 3, and 4 unless sulfate-resistant concrete is required.

   a. **Option 1.** Replace 20 to 35% of the cement with Class F fly ash.

   b. **Option 2.** Replace 35 to 50% of the cement with GGBFS.

   c. **Option 3.** Replace 35 to 50% of the cement with a combination of Class F fly ash, GGBFS, or silica fume. However, no more than 35% may be fly ash, and no more than 10% may be silica fume.

   d. **Option 4.** Use Type IP or Type IS cement. (Up to 10% of a Type IP or Type IS cement may be replaced with Class F fly ash, GGBFS, or silica fume.)

   e. **Option 5.** Replace 35 to 50% of the cement with a combination of Class C fly ash and at least 6% of silica fume, UFFA, or metakaolin. However, no more than 35% may be Class C fly ash, and no more than 10% may be silica fume.

   f. **Option 6.** Use a lithium nitrate admixture at a minimum dosage of 0.55 gal. of 30% lithium nitrate solution per pound of alkalis present in the hydraulic cement.

   g. **Option 7.** When using hydraulic cement only, ensure that the total alkali contribution from the cement in the concrete does not exceed 4.00 lb. per cubic yard. of concrete when calculated as follows:

$$\text{lb. alkali per cu. yd.} = \frac{(\text{lb. cement per cu. yd.}) \times (\%\ Na_2O \text{ equivalent in cement})}{100}$$

   In the above calculation, use the maximum cement alkali content reported on the cement mill certificate.

   h. **Option 8.** For any deviations from Options 1–7, perform the following:

- Test both coarse and fine aggregate separately in accordance with ASTM C 1260, using 440 g of the proposed cementitious material in the same proportions of hydraulic cement to supplementary cementing material to be used in the mix.
- Before use of the mix, provide the certified test report signed and sealed by a licensed professional engineer demonstrating that the ASTM C 1260 test result for each aggregate does not exceed 0.10% expansion.

B. Trial Batches. Perform all preliminary trial batches and testing necessary to substantiate the proposed mix designs, and provide documentation including mix design, material proportions, and test results substantiating that the mix design conforms to specification requirements.

Make all final trial batches using the proposed ingredients in a mixer that is representative of the mixers to be used on the job. Make the batch size at least 50% of the mixer's rated capacity. Perform fresh concrete tests for air and slump, and make, cure, and test strength specimens for compliance with specification requirements. Test at least 3 sets of design strength specimens with 2 specimens per set in accordance with Tex-418-A or Tex-448-A for each test age. Before placing, provide the Engineer the option of witnessing final trial batches, including the testing of the concrete. If not provided this option, the Engineer may require additional trial batches, including testing, before the concrete is placed.

Establish 7-day compressive strength target values using the following formula for each concrete mix to be used:

$$\text{Target value} = \text{Minimum design strength} \times \frac{\text{7 - day avg. trial batch strength}}{\text{28 - day avg. trial batch strength}}$$

When there are changes in aggregates or in type, brand, or source of cement, SCM, or chemical admixtures, reevaluate the mix as a new mix design. A change in vendor does not necessarily constitute a change in materials or source. When only the brand or source of cement is changed and there is a prior record of satisfactory performance of the cement with the ingredients, new trial batches may be waived by the Engineer.

When the maturity method is specified or permitted, establish the strength–maturity relationship in accordance with Tex-426-A. When using the maturity method any changes in any of the ingredients, including changes in proportions, will require the development of a new strength–maturity relationship for the mix.

C. Storage of Materials.

1. **Cement, Supplementary Cementing Materials, and Mineral Filler.** Store all cement, supplementary cementing materials, and mineral filler in weatherproof enclosures that will protect them from dampness or absorption of moisture.

   When permitted, small quantities of sacked cement may be stored in the open, on a raised platform, and under waterproof covering for up to 48 hours.

2. **Aggregates.** Handle and store concrete aggregates in a manner that prevents contamination with foreign materials. If the aggregates are stored on the ground, clear the sites for the stockpiles of all vegetation, level the sites, and do not use the bottom 6-in. layer of aggregate without cleaning the aggregate before use.

   When conditions require the use of 2 or more grades of coarse aggregates, maintain separate stockpiles and prevent intermixing. Where space is limited, separate the stockpiles using physical barriers. Store aggregates from different sources in different stockpiles unless the Engineer authorizes pre-blending of the aggregates. Minimize segregation in stockpiles. Remix and test stockpiles when segregation is apparent.

   Sprinkle stockpiles to control moisture and temperature as necessary. Maintain reasonably uniform moisture content in aggregate stockpiles.

3. **Admixtures.** Store admixtures in accordance with manufacturer's recommendations and prevent admixtures from freezing.

D. Measurement of Materials. Except for volumetric mixers, measure concrete materials by weight. Measure mixing water, consisting of water added to the batch, ice added to the batch, water occurring as surface moisture on the aggregates, and water introduced in the form of admixtures, by volume or weight. Measure ice by weight. Measure cement and supplementary cementing materials in a weigh hopper and on a separate scale from those used for other materials. Measure the cement first when measuring the cumulative weight. Measure concrete chemical admixtures in powdered form by weight. Measure concrete chemical admixtures in liquid form by weight or volume. Measure batch materials within the tolerances of Table 9.

Table 9
Measurement Tolerances – Non-Volumetric Mixers

Material	Tolerance (%)
Cement, wt.	±1
Mineral admixture, wt.	±1
Cement + SCM (cumulative weighing), wt.	±1
Water, wt. or volume	±3
Fine aggregate, wt.	±2
Coarse aggregate, wt.	±2
Fine + coarse aggregate (cumulative weighing), wt.	±1
Chemical admixtures, wt. or volume	±3

When measuring cementitious materials at less than 30% of scale capacity, ensure that the quantity measured is accurate to not less than the required amount and not more than 4% in excess. When measuring aggregates in a cumulative weigh batcher at less than 30% of the scale capacity, ensure that the cumulative quantity is measured accurate to ±0.3% of scale capacity or ±3% of the required cumulative weight, whichever is less.

For volumetric mixers, base tolerances on volume–weight relationship established by calibration, and measure the various ingredients within the tolerances of Table 10.

Correct batch weight measurements for moisture.

When approved, under special circumstances, measure cement in bags of standard weight. Weighing of sacked cement is not required. Do not use fractional bags except for small hand-mixed batches of approximately 5 cu. ft. or less and when an approved method of volumetric or weight measurement is used.

Table 10
Measurement Tolerances – Volumetric Mixers

Material	Tolerance
Cement, wt. %	0 to +4
SCM, wt. %	0 to +4
Fine aggregate, wt. %	±2
Coarse aggregate, wt. %	±2
Admixtures, wt. or volume %	±3
Water, wt. or volume %	±1

E. Mixing and Delivering Concrete. Mix and deliver concrete by means of one of the following operations:

- central-mixed,
- shrink-mixed,
- truck-mixed,
- volumetric mixer-mixed, or
- hand-mixed.

Operate mixers and agitators within the limits of the rated capacity and speed of rotation for mixing and agitation as designated by the manufacturer of the equipment.

For shrink-mixed and truck-mixed concrete, when there is a reason to suspect the uniformity of concrete delivered using a truck mixer or truck agitator, conduct slump tests of 2 individual samples taken after discharging approximately 15% and 85% of the load as a quick check of the probable degree of uniformity. Take the 2 samples within an elapsed time of at most 15 min. If the slumps of the 2 samples differ by more than the values shown in Table 11, investigate the causes and take corrective actions including adjusting the batching sequence at the plant and the mixing time and number of revolutions. Delivery vehicles that fail to meet the mixing uniformity requirements must not be used until the condition is corrected.

Table 11
Slump Tolerance[1]

Average Slump	Slump Tolerance[2]
4 in. or less	1.0 in.
4 to 6 in.	1.5 in.

1. Do not apply these tolerances to the required slumps in Table 8.
2. Maximum permissible difference in results of test of samples from 2 locations in the concrete batch.

Re-tempering or adding concrete chemical admixtures is only permitted at the job site when concrete is delivered in a truck mixer. Do not add water after the introduction of mixing water at the batch plant except on arrival at the job site, with approval, to adjust the slump of the concrete. When this water is added, do not exceed the mix design water–cementitious-material ratio. Turn the drum or blades at least 30 additional revolutions at mixing speed to ensure thorough and uniform mixing of the concrete. Do not add water or chemical admixtures to the batch after any concrete has been discharged.

Maintain concrete delivery and placement rates sufficient to prevent cold joints.

Before unloading, furnish the delivery ticket for the batch of concrete containing the information required on Department Form 596, "Concrete Batch Ticket."

When the concrete contains silica fume, adjust mixing times and batching operations as necessary to ensure the material is completely and uniformly dispersed in the mix. The dispersion of the silica fume within the mix will be verified by the Construction Division, Materials and Pavements Section, using cylinders made from trial batches. If uniform dispersion is not achieved, make necessary changes to the batching operations until uniform and complete dispersion of the silica fume is achieved.

1. **Central-Mixed Concrete.** Provide concrete that is mixed completely in a stationary mixer. Mix concrete for a period of 1 min. for 1 cu. yd. and 15 sec. for each additional cu. yd. of rated capacity of the mixer unless mixer performance test data demonstrate that shorter mixing times can be used to obtain a uniform mix in accordance with Tex-472-A. Count the mixing time from the time all the solid materials are in the drum. Charge the mixer so that some water will enter before the cement and aggregate. Ensure that all water is in the drum by the end of the first 1/4 of the specified mixing time. Adjust the mixing time if necessary to achieve a uniform mix. Concrete mixed completely in a stationary mixer must be delivered to the project in a truck mixer, truck agitator, or non-agitating delivery vehicle. When a truck mixer or truck agitator is used for transporting concrete, use the manufacturer's designated agitating speed for any turning during transportation. Non-agitating delivery vehicles must be clean and free of built-up concrete with adequate means to control concrete discharge. Deliver the concrete to the project in a thoroughly mixed and uniform mass, and discharge the concrete with a satisfactory degree of uniformity. Resolve questions regarding the uniformity of the concrete by testing when directed by the Engineer in accordance with Tex-472-A.
2. **Shrink-Mixed Concrete.** Provide concrete that is first partially mixed in a stationary mixer and then mixed completely in a truck mixer. Partially mix for the minimum time required to intermingle the ingredients in the stationary mixer, and then transfer to a truck mixer and mix the concrete at the manufacturer's designated mixing speed for an adequate amount of time to produce thoroughly mixed concrete. Deliver the concrete to the project in a thoroughly mixed and uniform mass, and discharge the concrete with a satisfactory degree of uniformity.
3. **Truck-Mixed Concrete.** Mix the concrete in a truck mixer from 70 to 100 revolutions at the mixing speed designated by the manufacturer to produce a uniform concrete mix. Deliver the

concrete to the project in a thoroughly mixed and uniform mass and discharge the concrete with a satisfactory degree of uniformity. Additional mixing at the job site at the mixing speed designated by the manufacturer is allowed as long as concrete is discharged before the drum has revolved a total of 300 revolutions after the introduction of the mixing water to the cement and the aggregates.

4. **Volumetric Mixer-Mixed Concrete.** Unless otherwise specified or permitted, perform all mixing operations in accordance with manufacturer's recommended procedures. Provide an accurate method of measuring all ingredients by volume, and calibrate equipment to assure correct measurement of materials within the specified tolerances.
5. **Hand-Mixed Concrete.** When permitted, for small placements of less than 2 cu. yd., mix up to a 2-sack batch of concrete by hand methods or in a small motor-driven mixer. For such placements, proportion the mix by volume or weight.

F. **Placing, Finishing, and Curing Concrete.** Place, finish, and cure concrete in accordance with the pertinent Items.

G. **Sampling and Testing of Concrete.** Unless otherwise specified, all fresh and hardened concrete is subject to testing as follows:

1. **Sampling Fresh Concrete.** Provide all material to be tested. Fresh concrete will be sampled for testing at the discharge end if using belt conveyors or pumps. When it is impractical to sample at the discharge end, a sample will be taken at the time of discharge from the delivery equipment and correlation testing will be performed and documented to ensure specification requirements are met at the discharge end.
2. **Testing of Fresh Concrete.**
   a. **Air Content.** Tex-414-A or Tex-416-A.
   b. **Slump.** Tex-415-A.
   c. **Temperature.** Tex-422-A.
   d. **Making and Curing Strength Specimens.** Tex-447-A.
3. **Testing of Hardened Concrete.** Only compressive strength testing will be used unless otherwise specified or shown on the plans.
   a. **Compressive Strength.** Tex-418-A.
   b. **Flexural Strength.** Tex-448-A.
   c. **Maturity.** Tex-426-a.
4. **Certification of Testing Personnel.** Contractor personnel performing testing must be either ACI-certified or qualified by a Department-recognized equivalent written and performance testing program for the tests being performed. Personnel performing these tests are subject to Department approval. Use of a commercial laboratory is permitted. All personnel performing testing using the maturity method must be qualified by a training program recognized by the Department before using this method on the job.
5. **Adequacy and Acceptance of Concrete.** The Engineer will sample and test the fresh and hardened concrete for acceptance. The test results will be reported to the Contractor and the concrete supplier. For any concrete that fails to meet the required strengths as outlined below, investigate the quality of the materials, the concrete production operations, and other possible problem areas to determine the cause. Take necessary actions to correct the problem including redesign of the concrete mix. The Engineer may suspend all concrete operations under the pertinent Items if the Contractor is unable to identify, document, and correct the cause of the low strengths in a timely manner. Resume concrete operations only after obtaining approval for any proposed corrective actions.
   a. **Structural Concrete.** For concrete classes identified as structural concrete in Table 5, the Engineer will make and test 7-day and 28-day specimens. Acceptance will be based on the design strength given in Table 5.

The Engineer will evaluate the adequacy of the concrete by comparing 7-day test results to the target value established in accordance with Section 421.4.B, "Trial Batches."

b. **All Other Concrete.** For concrete classes not identified as structural concrete in Table 5, the Engineer will make and test 7-day specimens. The Engineer will base acceptance on the 7-day target value established in accordance with Section 421.4.B, "Trial Batches."

6. **Test Sample Handling.** Unless otherwise shown on the plans or directed, remove forms and deliver department test specimens to curing facilities, in accordance with pertinent test procedures. Clean and prepare forms for reuse.

421.5. Measurement and Payment. The work performed, materials furnished, equipment, labor, tools, and incidentals will not be measured or paid for directly but will be subsidiary to pertinent Items.

ITEM 431

PNEUMATICALLY PLACED CONCRETE

431.1. Description. Furnish and place pneumatically applied concrete for the construction of portions of structures, repairing concrete structures, encasement of structural steel members, lining ditches and tunnels, soil-nail walls, and other work as shown on the plans or as directed. Pneumatically applied concrete can be either dry-mix or wet-mix. The dry-mix process consists of dry-mixed fine aggregate and hydraulic cement to which water is added immediately before its pneumatic expulsion from a nozzle. The wet-mix process consists of mechanically premixed concrete pneumatically applied through a nozzle.

431.2. Materials. Provide Class I concrete for repairs and Class II concrete for encasement unless otherwise noted. Provide the class of concrete shown on the plans for other work.

With the exceptions noted in Sections 431.2.A, "Exceptions to Item 421, 'Hydraulic Cement Concrete,'" 431.2.B, "Exceptions to Item 440, 'Reinforcing Steel,'" and 431.2.C, "Exception to DMS-6310, 'Joint Sealants and Fillers,'" provide materials in accordance with the pertinent requirements of the following Items:

- Item 420, "Concrete Structures"
- Item 421, "Hydraulic Cement Concrete"
- Item 440, "Reinforcing Steel"
- DMS-6310, "Joint Sealants and Fillers"
- DMS-4640, "Chemical Admixtures for Concrete."

A. Exceptions to Item 421, "Hydraulic Cement Concrete." Provide a fine aggregate that meets the requirements of Item 421, Table 4, Grade 1, and a coarse aggregate that meets the requirements of Item 421, Table 3, Grade 7, unless otherwise noted on the plans.

B. Exceptions to Item 440, "Reinforcing Steel." Provide steel pins, studs, or expansion bolts with a minimum diameter of 1/8 in. and a minimum length of 2 in. to attach reinforcement for the repair of concrete structures as shown on the plans or as directed. Reinforcing steel may be either welded wire fabric or reinforcing bars unless otherwise shown on the plans.

C. Exception to DMS-6310, "Joint Sealants and Fillers." Provide a preformed bituminous fiber material unless otherwise noted on the plans.

D. Proportioning and Mixing. Submit for approval a proposed mix design conforming to the basic mix design requirements provided in Table 1.

Table 1
Classes of Concrete

Class	Ratio of Cement to Total Aggregate[1]	Minimum 7-Day Compressive Strength (psi)
I	1:4	3,000
II	1:5	2,500
III	1:7	1,700

1. More cement may be used when approved.

Measure the cement and aggregates by volume, and mix with enough water to achieve the desired consistency. Use as little water as possible to achieve sufficient adhesion. Mix concrete sufficiently dry so that it will not sag or fall from vertical or inclined surfaces, or separate in horizontal work.

To verify the mix design before approval, prepare test panels using the same air pressure, nozzle tip, and position to be used for the production work. For each test panel, apply a 3-in. layer of concrete to a plywood sheet with minimum dimensions of 18 in. × 18 in. Cure the test panels in the same manner as the proposed work.

Take three cores, each 2 in. in diameter, out of each test panel and test in compression at seven days in accordance with Tex-424-A. The mix design will be approved when the average strength of the three

cores conforms to the strengths shown in Table 1. Provide additional test panels as directed if there are any changes in materials, equipment, or nozzle operator during the work.

431.3. Construction.

A. Surface Preparation. When concrete is to be placed against soil, grade the area of proposed work accurately to the elevation and dimensions shown on the plans. Compact with sufficient moisture to provide a firm foundation and to prevent absorption of water from the concrete, but without free surface moisture.

When concrete is used to encase structural steel members, remove paint, rust, loose mill scale, grease or oil, and all other foreign materials that may reduce the bond of the concrete to the steel.

When concrete is placed against concrete or rock, remove all deteriorated or loose material by chipping with pneumatic, electric, or hand tools. Cut square or slightly undercut shoulders approximately 1 in. deep along the perimeter of repair areas. Sandblast the surface to clean all rust from exposed reinforcing steel and to produce a clean rough-textured surface on the concrete or rock. Wet the surface against which the concrete will be placed for at least 1 hour with potable water. Place the concrete when the surface has dried to a saturated surface-dry (SSD) condition. Achieve SSD conditions by high-pressure water blasting 15 to 30 minutes before placing the repair material. A saturated surface-dry condition is achieved when the surface remains damp when exposed to sunlight for 15 minutes.

Provide joints, side forms, headers, and shooting strips for backing or paneling. Use ground or gauging wires where necessary to establish thickness, surface planes, and finish lines.

B. Reinforcement. Place and secure reinforcement to ensure that there is no displacement from impact of applying pneumatically placed concrete. Place reinforcing bars at a spacing not less than 2-1/2 in. Support reinforcing wire fabric or bars using anchor studs, expansion hook bolts, grouted rebar, or steel pins capable of resisting a pullout force of 2,500 lb. Space anchors no more than 12 in. center-to-center on overhead surfaces, 18 in. center-to-center on vertical surfaces, and 36 in. center-to-center on top horizontal surfaces. Use at least 3 anchors in each individual patch area. Secure steel pins or studs into the concrete with epoxy or other approved methods. Do not use explosive force to shoot pins, studs, or other anchors into concrete. Check the resistance to pullout of the reinforcing anchors as directed. Notify the Engineer prior to installation of the anchors. Locate anchors so that there is no damage to prestressing tendons or conduits embedded in the concrete.

Use reinforcement when performing repair work in all areas where the thickness of the concrete will exceed 1-1/2 in. Use a single layer of either 2 × 2 – W1.2 × W1.2 or 3 × 3 –W1.5 × W1.5 of welded wire fabric unless noted otherwise on the plans. Use a single layer of wire fabric to reinforce each 4-in. thickness of patch or fractional part in areas where the concrete thickness exceeds 4 in. Encase completely each layer of wire fabric in concrete that has taken its initial set before installing the succeeding layer of wire fabric. Place the reinforcing fabric parallel to the finished surface, and support it so that it will be a minimum of 3/4 in. out from the surface to be covered. Provide a minimum of 1 in. clearance between the finished concrete surface and all steel items including anchors, reinforcing bars, and wire fabric. Lap adjacent sheets at least 6 in. and tie together securely at a spacing of no more than 18 in. Pre-bend fabric before installing to fit around corners and into re-entrant angles.

For encasement of steel members, pre-bend the welded wire fabric using a template to conform as nearly as possible to the outlines of the members to be encased. Drill holes between 1/2 and 1 in. in diameter in the webs of the members as close as possible to the flanges to allow for attachment of the reinforcing fabric. Space these holes at approximately 3 ft. on center. Use 3/8-in. diameter rods placed through these holes to secure the reinforcing fabric. Hold the reinforcing fabric at least 3/4 in. out from the surface of the steel member. Lap adjacent fabric sheets at least 6 in. and tie together at a spacing not to exceed 12 in.

C. Pneumatic Placement of Concrete.

1. **General.** Place the concrete when the ambient temperature is above 35°F. Do not place concrete against a surface containing frost or ice. Protect concrete from freezing or quick drying after placement. For construction of portions of structures, repairing concrete structures, or encasement of structural steel members, apply the concrete using pneumatic equipment that sprays the mix

onto the prepared surface at a velocity less than 100 ft. per second. Minimize rebound and produce a compacted dense homogenous mass. Do not apply concrete if high winds will prevent proper application or if rain could wash out the concrete.

For construction of portions of structures, repairing concrete structures, or encasement of structural steel members, provide documentation that the nozzle operator is certified by the American Concrete Institute for the process (wet-mix or dry-mix) and application (vertical or overhead) to be used. Hold the nozzle approximately 2 to 4 ft. from the surface and position it so that the concrete impinges nearly at right angles to the surface being covered. Use shooting strips to ensure straight lines, square corners, and a plane surface of concrete. Place to keep the trapping of rebound to a minimum. Slope the concrete off to a thin edge at the ends of each day's work or at similar stopping periods requiring construction joint. Thoroughly clean and wet previously placed concrete before placing an adjacent or additional section. Apply a sufficient number of coats to obtain the required thickness. Place coats on vertical and overhead surfaces in layers not greater than 1 in. thick. Place so that the coat does not sag or decrease the bond of the preceding coat. Provide a sufficient interval between successive layers in sloping, vertical, or overhead work to allow initial but not final set. Clean the surface to remove the thin film of laitance to provide for a bond with succeeding applications. Remove rebound and accumulated loose sand from the surface to be covered prior to placing of the original or succeeding layers of concrete. Correct any sags or other defects to the proper section as directed.

Apply the concrete using either the wet-mix or dry-mix process unless otherwise noted on the plans. Mix the materials thoroughly and uniformly using a paddle or drum type mixer designed for pneumatic application. Wet-mix process applications can use transit-mix concrete. Do not use the wet-mix process for repair of damaged concrete.

Clean mixing and placing equipment at regular intervals. Inspect the nozzle liner and water and air injection system daily and replace worn parts as necessary.

2. **Dry-Mix Process.** Use a compressor or blower capable of delivering a sufficient volume of oil-free air at the pressure shown in Table 2. Maintain steady pressure throughout the placing process.

   Use a water pump with the size and capacity to deliver water to the nozzle with a pressure at least 15 psi more than the required air pressure.

Table 2
Compressor Capacities

Compressor Capacity, CFM	Hose Diameter, in.	Maximum Size of Nozzle Tip, in.	Operating Air Pressure Available, psi
250	1	3/4	40
315	1-1/4	1	45
365	1-1/2	1-1/4	55
500	1-5/8	1-1/2	65
600	1-3/4	1-5/8	75
750	2	1-3/4	85

   The values shown in Table 2 are based on a hose length of 150 ft. with the nozzle less than 25 ft. above the delivery equipment. Increase operating pressure approximately 5 psi for each additional 50 ft. of hose and approximately 5 psi for each 25 ft. the nozzle is raised.

3. **Wet-Mix Process.** Operate the pump at a line pressure between 100 psi and 300 psi. Use delivery hoses between 1-1/2 in. and 3 in. in diameter. Use mixing equipment capable of thoroughly mixing the materials in sufficient quantity to maintain continuous placement.

D. Construction Joints. Use a square butt joint where the joint is subject to compressive stress or is over existing construction joints unless noted otherwise on the plans. Use tapered or square butt joints at other locations. Square the outside 1 in. of tapered joints perpendicular to the surface.

E. Finish. Use a sharp trowel to cut off all high spots after the concrete has been placed to the desired thickness or screed to a true plane as determined by shooting strips or by the original concrete surface.

Lightly apply cutting screeds, where used, to all surfaces so as not to disturb the concrete for an appreciable depth. Work in an upward direction when concrete is applied on vertical surfaces. Give the finished concrete a final flash coat of about 1/8 in. unless directed otherwise. Obtain a uniform appearance on all exposed surfaces.

F. Curing. Cure encasements with water for 4 days. Cure repairs and structural construction using either a piece of wet burlap taped over the repaired area with a covering of 4-mil minimum plastic sheet also taped in place or membrane curing as approved. Overlap the burlap with the plastic sheet, and continuously tape the edges with a tape at least 3 in. wide (air duct tape or better) to completely enclose the mat and hold in moisture. Cure in this manner for 4 days. Curing is not required for soil-nail walls. Apply membrane curing in accordance with Item 420, "Concrete Structures," for tunnel and ditch linings and vertical or overhead patches as approved.

G. Repair of Defects. Repair or replace debonded areas as directed.

431.4. Measurement. Measurement of pneumatically placed concrete for encasement of structural members will be by the square foot of the actual contact area.

Measurement of pneumatically placed concrete for repair of concrete structures will be by the cubic foot in place using the surface area times the average depth of the patch.

431.5. Payment. When pneumatically placed concrete is specified as a bid item, the work performed and materials furnished in accordance with this Item and measured as provided under "Measurement" will be paid for at the unit price bid for "Pneumatically Placed Concrete (Encasement)" or for "Pneumatically Placed Concrete (Repair)." This price is full compensation for cement, aggregate, water, and reinforcement; furnishing and driving steel drive pins; furnishing and placing expansion bolts; removal of deteriorated or unsound concrete; mixing, placing, and curing pneumatically placed concrete; and equipment, labor, tools, and incidentals. Pneumatically placed concrete used for work other than encasement or repair will not be paid for directly but will be considered subsidiary to pertinent Items.

ITEM 432

RIPRAP

432.1. Description. Furnish and place concrete, stone, cement-stabilized, or special riprap.

432.2. Materials. Furnish materials in accordance with the following:

- Item 420, "Concrete Structures"
- Item 421, "Hydraulic Cement Concrete"
- Item 431, "Pneumatically Placed Concrete"
- Item 440, "Reinforcing Steel"
- DMS-6200, "Filter Fabric."

A. Concrete Riprap. Use Class B Concrete unless otherwise shown on the plans.

B. Pneumatically Placed Concrete Riprap. Use Class II concrete that meets Item 431, "Pneumatically Placed Concrete," unless otherwise shown.

C. Stone Riprap. Unless otherwise shown on the plans, use durable natural stone with a minimum bulk specific gravity of 2.40 as determined by Tex-403-A. Provide stone that, when tested in accordance with Tex-411-A, has a maximum weight loss of 18% after 5 cycles of magnesium sulfate solution and 14% after 5 cycles of sodium sulfate solution.

For all types of stone riprap perform a size verification test on the first 5,000 sq. yd. of finished riprap stone at a location determined by the Engineer. Weigh each stone in a square test area with the length of each side of the square equal to 3 times the specified riprap thickness. The weight of the stones, excluding spalls, should be as specified below. Additional tests may be required. Do not place additional riprap until the initial 5,000 sq. yd. of riprap has been approved.

When specified, provide grout or mortar in accordance with Item 421,"Hydraulic Cement Concrete." Provide grout with a consistency that will flow into and fill all voids.

Provide filter fabric in accordance with DMS-6200, "Filter Fabric." For protection stone riprap, provide Type 2 filter fabric unless otherwise shown on the plans. For Type R, F, or Common stone riprap, provide Type 2 filter fabric when shown on the plans.

1. **Type R.** Use stones between 50 and 250 lb. with a minimum of 50% of the stones heavier than 100 lb.
2. **Type F.** Use stones between 50 and 250 lb. with a minimum of 40% of the stones heavier than 100 lb. Use stones with at least 1 broad flat surface.
3. **Common.** Use stones between 50 and 250 lb. Use stones that are at least 3 in. in their least dimension. Use stones that are at least twice as wide as they are thick. When shown on the plans or approved, material may consist of broken concrete removed under the Contract or from other approved sources. Before placement of each piece of broken concrete, cut exposed reinforcement flush with all surfaces.
4. **Protection.** Use boulders or quarried rock that meets the gradation requirements of Table 1. Both the width and the thickness of each piece of riprap must be at least 1/3 of the length. When shown on the plans or as approved, material may consist of broken concrete removed under the Contract or from other approved sources. Before placement of each piece of broken concrete, cut exposed reinforcement flush with all surfaces. Determine gradation of the finished, in-place, riprap stone under the direct supervision of the Engineer in accordance with Tex-411-A, Part II.

Table 1
In-Place Protection Riprap Gradation Requirements

Thickness	Maximum Size (lb.)	90% Size[1] (lb.)	50% Size[1] (lb.)	8% Size[1], Minimum (lb.)
12 in.	200	80–180	30–75	3
15 in.	320	170–300	60–165	20
18 in.	530	290–475	105–220	22
21 in.	800	460–720	175–300	25
24 in.	1,000	550–850	200–325	30
30 in.	2,600	1,150–2,250	400–900	40

1. As defined in Tex-401-A, Part II.

Provide bedding stone that in-place meets the gradation requirements shown in Table 2 or as otherwise shown on the plans. Determine size distribution in accordance with Tex-401-A, Part I.

Table 2
Protection Riprap Bedding Material Gradation Requirements

Sieve Size (Sq. Mesh)	% by Weight Passing
3 in.	100
1-1/2 in.	50–80
3/4 in.	20–60
No. 4	0–15
No. 10	0–5

D. Cement-Stabilized Riprap. Provide aggregate that meets Item 247, "Flexible Base," for the type and grade shown on plans. Use cement-stabilized riprap with 7% hydraulic cement by dry weight of the aggregate.

E. Special Riprap. Furnish materials for special riprap according to the plans.

432.3. Construction. Dress slopes and protected areas to the line and grade shown on the plans before the placement of riprap. Place riprap and toe walls according to details and dimensions shown on the plans or as directed.

A. Concrete Riprap. Reinforce concrete riprap with 6 × 6 – W2.9 × W2.9 welded wire fabric or with No. 3 or No. 4 reinforcing bars spaced at a maximum of 18 in. in each direction unless otherwise shown. Alternative styles of welded wire fabric that provide at least 0.058 sq. in. of steel per foot in both directions may be used if approved. A combination of welded wire fabric and reinforcing bars may be provided when both are permitted. Provide a minimum 6-in. lap at all splices. At the edge of the riprap, provide a minimum horizontal cover of 1 in. and a maximum cover of 3 in. Place the first parallel bar at most 6 in. from the edge of concrete. Use approved supports to hold the reinforcement approximately equidistant from the top and bottom surface of the slab. Adjust reinforcement during concrete placement to maintain correct position.

As directed, sprinkle or sprinkle and consolidate the subgrade before the concrete is placed. All surfaces must be moist when concrete is placed.

After placing the concrete, compact and shape it to conform to the dimensions shown on plans. After it has set sufficiently to avoid slumping, finish the surface with a wood float to secure a smooth surface or broom finish as approved.

Immediately after the finishing operation, cure the riprap according to Item 420, "Concrete Structures."

B. Stone Riprap. Provide the following types of stone riprap when shown on the plans:

- Dry Riprap. Dry riprap is stone riprap with voids filled with only spalls or small stones.
- Grouted Riprap. Grouted riprap is Type R, F, or Common stone riprap with voids grouted after all the stones are in place.
- Mortared Riprap. Mortared riprap is Type F stone riprap laid and mortared as each stone is placed.

Use spalls and small stones lighter than 25 lb. to fill open joints and voids in stone riprap, and place to a tight fit.

Do not place mortar or grout when the air temperature is below 35°F. Protect work from rapid drying for at least 3 days after placement.

Unless otherwise approved, place filter fabric with the length running up and down the slope. Ensure fabric has a minimum overlap of 2 ft. Secure fabric with nails or pins. Use nails at least 2 in. long with washers or U-shaped pins with legs at least 9 in. long. Space nails or pins at a maximum of 10 ft. in each direction and 5 ft. along the seams. Alternative anchorage and spacing may be used when approved.

1. **Type R.** Construct riprap as shown in Figure 1 and as shown on the plans. Place stones in a single layer with close joints so that most of their weight is carried by the earth and not by the adjacent stones. Place the upright axis of the stones at an angle of approximately 90° to the embankment slope. Place each course from the bottom of the embankment upward with the larger stones in the lower courses.

   Fill open joints between stones with spalls. Place stones to create a uniform finished top surface. Do not exceed a 6-in. variation between the tops of adjacent stones. Replace, embed deeper, or chip away stones that project more than the allowable amount above the finished surface.

   When the plans require Type R stone riprap to be grouted, prevent earth, sand, or foreign material from filling the spaces between the stones. After the stones are in place, wet the stones thoroughly, fill the spaces between the stones with grout, and pack. Sweep the surface of the riprap with a stiff broom after grouting.

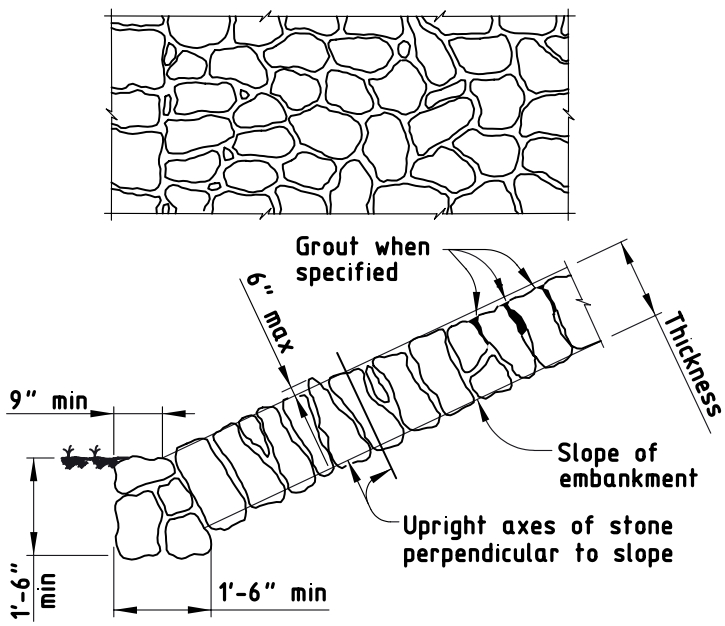

Figure 1
Type R stone riprap, dry or grouted.

2. **Type F.**

   a. **Dry Placement.** Construct riprap as shown in Figure 2. Set the flat surface on a prepared horizontal earth bed, and overlap the underlying course to secure a lapped surface. Place the large stones first, roughly arranged in close contact. Fill the spaces between the large stones with suitably sized stones placed to leave the surface evenly stepped and conforming to the contour required. Place stone to drain water down the face of the slope.

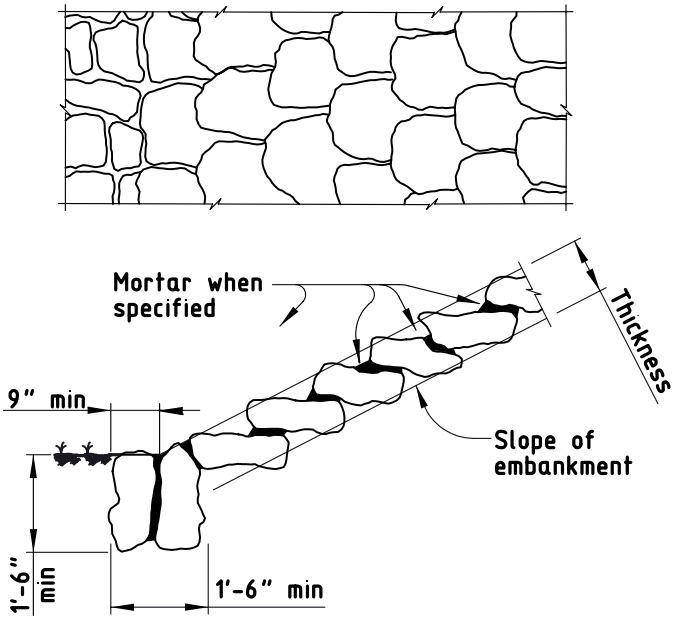

Figure 2
Type F stone riprap, dry or mortared.

b. Grouting. Construct riprap as shown in Figure 3. Size, shape, and lay large flat-surfaced stones to produce an even surface with minimal voids. Place stones with the flat surface facing upward parallel to the slope. Place the largest stones near the base of the slope. Fill spaces between the larger stones with stones of suitable size, leaving the surface smooth, tight, and conforming to the contour required. Place the stones to create a plane surface with a maximum variation of 6 in. in 10 ft. from true plane. Provide the same degree of accuracy for warped and curved surfaces. Prevent earth, sand or foreign material from filling the spaces between the stones. After the stones are in place, wet them thoroughly, fill the spaces between them with grout, and pack. Sweep the surface with a stiff broom after grouting.

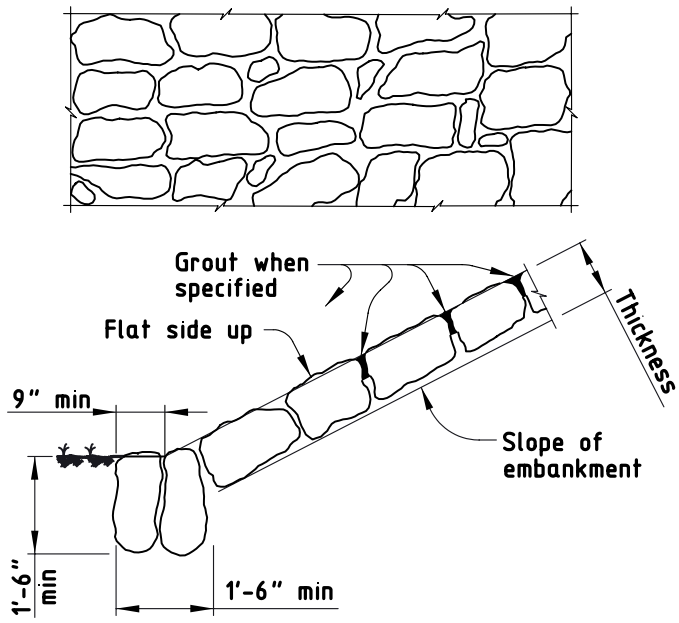

Figure 3
Type F stone riprap, grouted.

c. **Mortaring.** Construct riprap as shown in Figure 2. Lap courses as described for dry placement. Before placing mortar, wet the stones thoroughly. As the larger stones are placed, bed them in fresh mortar and shove adjacent stones into contact with one another. After completing the work, spread all excess mortar forced out during placement of the stones uniformly over them to fill all voids completely. Point up all joints roughly either with flush joints or with shallow, smooth-raked joints as directed.

3. **Common.** Construct riprap as shown in Figure 4. Place stones on a bed excavated for the base course. Bed the base course of stone well into the ground with the edges in contact. Bed and place each succeeding course in even contact with the preceding course. Use spalls and small stones to fill any open joints and voids in the riprap. Ensure the finished surface presents an even, tight surface, true to the line and grades of the typical sections.

   When the plans require grouting common stone riprap, prevent earth, sand, or foreign material from filling the spaces between the stones. After the stones are in place, wet them thoroughly, fill the spaces between them with grout, and pack. Sweep the surface with a stiff broom after grouting.

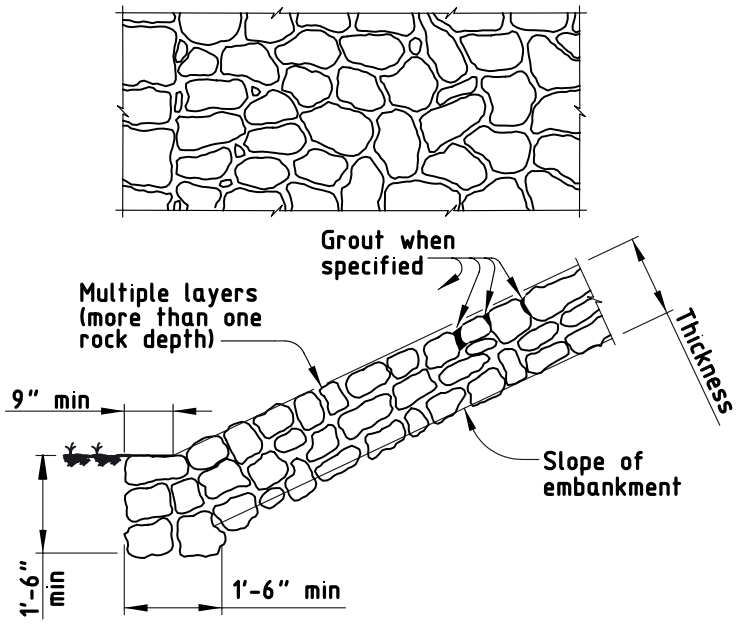

Figure 4
Common stone riprap, dry or grouted.

4. **Protection.** Construct riprap as shown in Figure 5. Place riprap stone on the slopes within the limits shown on the plans. Place stone for riprap on the bedding material to produce a reasonably well-graded mass of riprap with the minimum practicable percentage of voids. Construct the riprap to the lines and grades shown on the plans or staked in the field. A tolerance of +6 in. and −0 in. from the slope line and grades shown on the plans is allowed in the finished surface of the riprap. Place riprap to its full thickness in a single operation. Avoid displacing the bedding material. Ensure that the entire mass of stones in their final position is free from objectionable pockets of small stones and clusters of larger stones. Do not place riprap in layers, and do not place it by dumping it into chutes, dumping it from the top of the slope, pushing it from the top of the slope, or any method likely to cause segregation of the various sizes. Obtain the desired distribution of the various sizes of stones throughout the mass by selective loading of material at the quarry or other source or by other methods of placement that will produce the specified results. Rearrange individual stones by mechanical equipment or by hand if necessary to obtain a reasonably well-graded distribution of stone sizes.

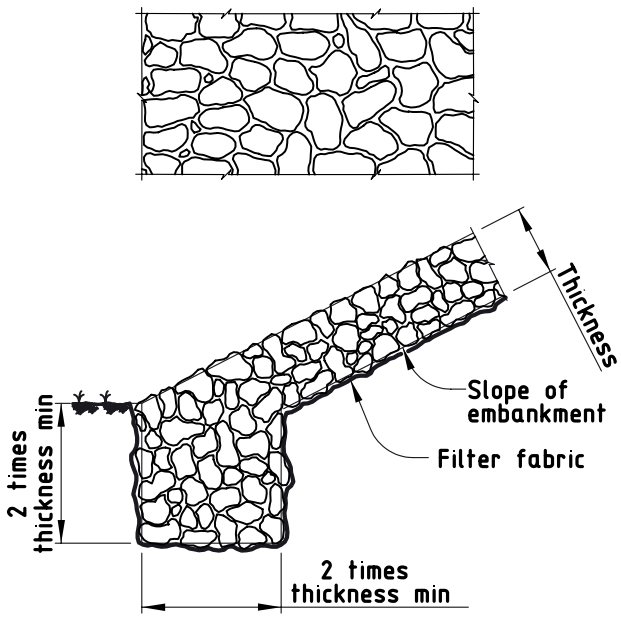

Figure 5
Protection stone riprap.

C. Pneumatically Placed Concrete Riprap, Class II. Meet Item 431, "Pneumatically Placed Concrete." Provide reinforcement following the details on the plans and Item 440, "Reinforcing Steel." Support reinforcement with approved supports throughout placement of concrete.

Give the surface a wood-float finish or a gun finish as directed. Immediately after the finishing operation, cure the riprap with membrane-curing compound in accordance with Item 420, "Concrete Structures."

D. Cement-Stabilized Riprap. Follow the requirements of the plans and the provisions for concrete riprap except when reinforcement is not required. The Engineer will approve the design and mixing of the cement-stabilized riprap.

E. Special Riprap. Construct special riprap according to the plans.

432.4. Measurement. This Item will be measured by the cubic yard of material complete in place. Volume will be computed on the basis of the measured area in place and the thickness and toe wall width shown on the plans.

For stone riprap for protection, the quantity of the bedding material to be paid for will be measured by the cubic yard as computed from the measured area in place and the bedding thickness shown on the plans.

432.5. Payment. The work performed and materials furnished in accordance with this Item and measured as provided under "Measurement" will be paid for at the unit price bid for "Riprap" of the type, thickness, and void-filling technique (Dry, Grout, Mortar) specified, as applicable. This price is full compensation for furnishing, hauling, and placing riprap and for filter fabric, expansion joint material, concrete and reinforcing steel, grout and mortar, scales, test weights, equipment, labor, tools, and incidentals.

Payment for excavation of toe wall trenches, for all necessary excavation below natural ground or bottom of excavated channel, and for shaping of slopes for riprap will be included in the unit price bid per cubic yard of riprap.

When bedding is required for protection stone riprap, payment will be made at the unit price for "Bedding Material" of the thickness specified. This price is full compensation for furnishing, hauling, placing, and maintaining the bedding material until placement of the riprap cover is completed and accepted; excavation required for placement of bedding material; and equipment, scales, test weights, labor, tools, and incidentals. No payment will be made for excess thickness of bedding nor for material required to replace embankment material lost by rain wash, wind erosion, or otherwise.

ITEM 440

REINFORCING STEEL

440.1. Description. Furnish and place reinforcing steel of the sizes and details shown on the plans.

440.2. Materials.

A. Approved Mills. Before furnishing steel, producing mills of reinforcing steel for the Department must be pre-approved in accordance with DMS-7320, "Qualification Procedure for Reinforcing Steel Mills," by the Construction Division, which maintains a list of approved producing mills. Reinforcing steel obtained from unapproved sources will not be accepted.

B. Deformed Bar and Wire Reinforcement. Unless otherwise shown on the plans, reinforcing steel must be Grade 60, and bar reinforcement must be deformed. Reinforcing steel must conform to one of the following:

- ASTM A 615, Grades 40 or 60;
- ASTM A 996, Type A, Grades 40 or 60;
- ASTM A 996, Type R, Grade 60, permitted in concrete pavement only (Furnish ASTM A 996, Type R bars as straight bars only and do not bend them. Bend tests are not required.); or
- ASTM A 706.

The provisions of this Item take precedence over ASTM provisions.

The nominal size, area, and weight of reinforcing steel bars covered by this Item are shown in Table 1. Designate smooth bars up to No. 4 by size number and above No. 4 by diameter in inches.

Table 1
Size, Area, and Weight of Reinforcing Steel Bars

Bar Size Number (in.)	Bar Size Number (mm)	Diameter (in.)	Area (Sq. in.)	Weight per Ft.
3	10	0.375	0.11	0.376
4	13	0.500	0.20	0.668
5	16	0.625	0.31	1.043
6	19	0.750	0.44	1.502
7	22	0.875	0.60	2.044
8	25	1.000	0.79	2.670
9	29	1.128	1.00	3.400
10	32	1.270	1.27	4.303
11	36	1.410	1.56	5.313
14	43	1.693	2.25	7.650
18	57	2.257	4.00	13.60

Note: Bar size numbers (in.) are based on the number of eighths of an inch included in the nominal diameter of the bar. Bar size numbers (mm) approximate the number of millimeters included in the nominal diameter of the bar.

C. Smooth Bar and Spiral Reinforcement. Smooth bars and dowels for concrete pavement must have a minimum yield strength of 60 ksi and meet ASTM A 615. For smooth bars that are larger than No. 3, provide steel conforming to ASTM A 615 or meet the physical requirements of ASTM A 36.

Spiral reinforcement may be smooth or deformed bars or wire of the minimum size or gauge shown on the plans. Bars for spiral reinforcement must comply with ASTM A 615, Grade 40; ASTM A 996, Type A, Grade 40; or ASTM A 675, Grade 80, meeting dimensional requirements of ASTM A 615. Smooth wire must comply with ASTM A 82, and deformed wire must comply with ASTM A 496.

D. Weldable Reinforcing Steel. Reinforcing steel to be welded must comply with ASTM A 706 or have a carbon equivalent (C.E.) of at most 0.55%. A report of chemical analysis showing the percentages of elements necessary to establish C.E. is required for reinforcing steel that does not meet ASTM A 706

to be structurally welded. These requirements do not pertain to miscellaneous welds on reinforcing steel as defined in Section 448.4.B.1.a, "Miscellaneous Welding Applications."

Calculate C.E. using the following formula:

$$C.E. = \%C + \frac{\%Mn}{6} + \frac{\%Cu}{40} + \frac{\%Ni}{20} + \frac{\%Cr}{10} - \frac{\%Mo}{50} - \frac{\%V}{10}$$

E. Welded Wire Fabric. For fabric reinforcement, use wire that conforms to ASTM A 82 or A 496. Use wire fabric that conforms to ASTM A 185 or A 497. Observe the relations shown in Table 2 among size number, diameter in inches, and area when ordering wire by size numbers, unless otherwise specified. Precede the size number for deformed wire with "D" and for smooth wire with "W."

Designate welded wire fabric as shown in the following example: 6 × 12 – W16 × W8 (indicating 6-in. longitudinal wire spacing and 12-in. transverse wire spacing with smooth No. 16 wire longitudinally and smooth No. 8 wire transversely).

Table 2
Wire Size Number, Diameter, and Area

Size Number (in.)	Size Number (mm)	Diameter (in.)	Area (sq. in.)
31	200	0.628	0.310
30	194	0.618	0.300
28	181	0.597	0.280
26	168	0.575	0.260
24	155	0.553	0.240
22	142	0.529	0.220
20	129	0.505	0.200
18	116	0.479	0.180
16	103	0.451	0.160
14	90	0.422	0.140
12	77	0.391	0.120
10	65	0.357	0.100
8	52	0.319	0.080
7	45	0.299	0.070
6	39	0.276	0.060
5.5	35	0.265	0.055
5	32	0.252	0.050
4.5	29	0.239	0.045
4	26	0.226	0.040
3.5	23	0.211	0.035
2.9	19	0.192	0.035
2.5	16	0.178	0.025
2	13	0.160	0.020
1.4	9	0.134	0.014
1.2	8	0.124	0.012
0.5	3	0.080	0.005

Note: Size numbers (in.) are the nominal cross-sectional area of the wire in hundredths of a square inch. Size numbers (mm) are the nominal cross-sectional area of the wire in square millimeters. Fractional sizes between the sizes listed above are also available and acceptable for use.

F. Epoxy Coating. Epoxy coating will be required as shown on the plans. Before furnishing epoxy-coated reinforcing steel, an epoxy applicator must be pre-approved in accordance with DMS-7330, "Qualification Procedure for Reinforcing Steel Epoxy Coating Applicators." The Construction Division maintains a list of approved applicators.

Coat reinforcing steel in accordance with Table 3.

Table 3
Epoxy Coating Requirements for Reinforcing Steel

Material	Specification
Bar	ASTM A 775 or A 934
Wire or fabric	ASTM A 884 Class A or B
Mechanical couplers	As shown on the plans
Hardware	As shown on the plans

Use epoxy coating material and coating repair material that complies with DMS-8130, "Epoxy Powder Coating for Reinforcing Steel." Do not patch more than 1/4 in. total length in any foot at the applicator's plant.

Epoxy-coated reinforcement will be sampled and tested in accordance with Tex-739-I.

Maintain identification of all reinforcing throughout the coating and fabrication and until delivery to the project site.

Furnish 1 copy of a written certification that the coated reinforcing steel meets the requirements of this Item and 1 copy of the manufacturer's control tests.

G. Mechanical Couplers. When mechanical splices in reinforcing steel bars are shown on the plans, use the following types of coupler:

- sleeve-filler,
- sleeve-threaded,
- sleeve-swaged, or
- sleeve-wedge.

Furnish only couplers that have been produced by a manufacturer that has been prequalified in accordance with DMS-4510, "Mechanical Couplers." Sleeve-wedge type couplers will not be permitted on coated reinforcing. Couplers for use on individual projects must be sampled and tested in accordance with DMS-4510. Furnish couplers only at locations shown on the plans.

440.3. Construction.

A. Bending. Cold-bend the reinforcement accurately to the shapes and dimensions shown on the plans. Fabricate in the shop if possible. Field-fabricate, if permitted, using a method approved by the Engineer. Replace improperly fabricated, damaged, or broken bars at no additional expense to the Department. Repair damaged or broken bars embedded in a previous concrete placement using a method approved by the Engineer.

Unless otherwise shown on the plans, the inside diameter of bar bends, in terms of the nominal bar diameter (d), must be as shown in Table 4.

Table 4
Minimum Inside Diameter of Bar Bends

Bend	Bar Size Number (in.)	Bar Size Number (mm)	Diameter
Bends of 90° and greater in stirrups, ties, and other secondary bars that enclose another bar in the bend	3, 4, 5	10, 13, 16	4d
	6, 7, 8	19, 22, 25	6d
Bends in main bars and in secondary bars not covered above	3 through 8	10 through 25	6d
	9, 10, 11	29, 32, 36	8d
	14, 18	43, 57	10d

Note: Bar size numbers (in.) are based on the number of eighths of an inch included in the nominal diameter of the bar. Bar size numbers (mm) approximate the number of millimeters included in the nominal diameter of the bar.

Where bending No. 14 or No. 18 Grade 60 bars is required, bend-test representative specimens as described for smaller bars in the applicable ASTM specification. Make the required 90° bend around a pin with a diameter of 10 times the nominal diameter of the bar.

B. Tolerances. Fabrication tolerances for bars are shown in Figure 1.

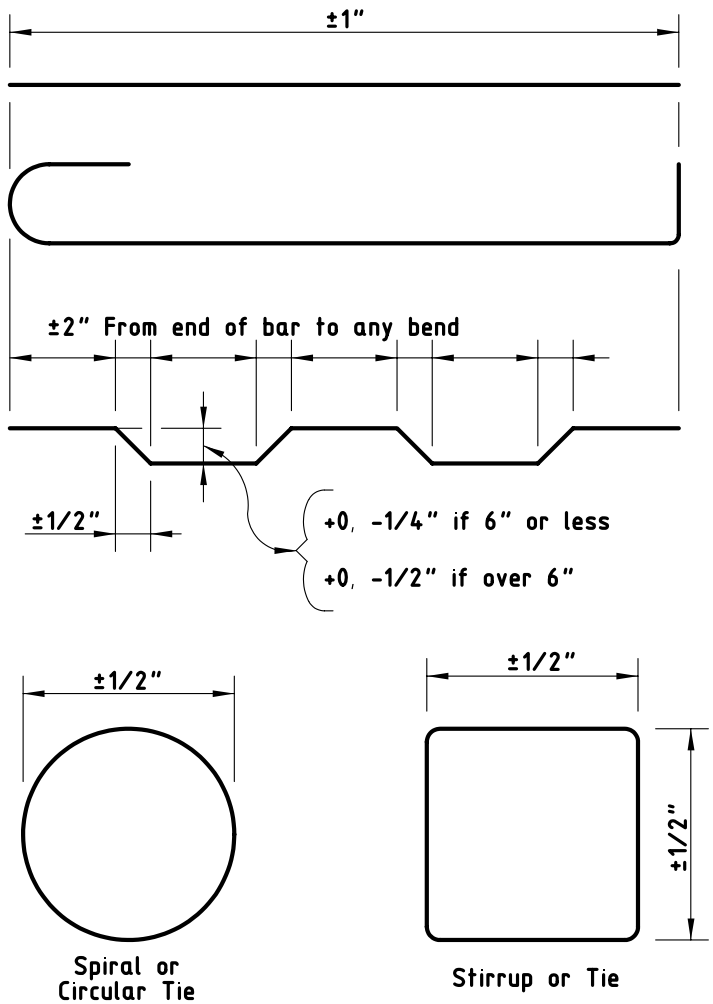

Figure 1
Fabrication tolerances for bars.

C. Storage. Store steel reinforcement above the ground on platforms, skids, or other supports, and protect it from damage and deterioration. Ensure that reinforcement is free from dirt, paint, grease, oil, and other foreign materials when it is placed in the work. Use reinforcement free from defects such as cracks and delaminations. Rust, surface seams, surface irregularities, or mill scale will not be cause for rejection if the minimum cross-sectional area of a hand wire-brushed specimen meets the requirements for the size of steel specified.

D. Splices. Lap-splice, weld-splice, or mechanically splice bars as shown on the plans. Additional splices not shown on the plans will require approval. Splices not shown on the plans will be permitted in slabs 15 in. or less in thickness, columns, walls, and parapets.

- Unless otherwise approved, splices will not be permitted in bars 30 ft. or less in plan length. For bars exceeding 30 ft. in plan length, the distance center-to-center of splices must be at least 30 ft. minus 1 splice length, with no more than 1 individual bar length less than 10 ft. Make lap splices

not shown on the plans, but otherwise permitted, in accordance with Table 5. Maintain the specified concrete cover and spacing at splices, and place the lap-spliced bars in contact, securely tied together.

Table 5
Minimum Lap Requirements for Bar Sizes through No. 11

Bar Size Number (in.)	Bar Size Number (mm)	Uncoated Lap Length	Coated Lap Length
3	10	1 ft. 4 in.	2 ft. 0 in.
4	13	1 ft. 9 in.	2 ft. 8 in.
5	16	2 ft. 2 in.	3 ft. 3 in.
6	19	2 ft. 7 in.	3 ft. 11 in.
7	22	3 ft. 5 in.	5 ft. 2 in.
8	25	4 ft. 6 in.	6 ft. 9 in.
9	29	5 ft. 8 in.	8 ft. 6 in.
10	32	7 ft. 3 in.	10 ft. 11 in.
11	36	8 ft. 11 in.	13 ft. 5 in.

Note: Bar size numbers (in.) are based on the number of eighths of an inch included in the nominal diameter of the bar. Bar size numbers (mm) approximate the number of millimeters included in the nominal diameter of the bar.

- Do not lap No. 14 or No. 18 bars.
- Lap spiral steel at least 1 turn.
- Splice welded wire fabric using a lap length that includes the overlap of at least 2 cross wires plus 2 in. on each sheet or roll. Splices using bars that develop equivalent strength and are lapped in accordance with Table 5 are permitted.
- For box culvert extensions with less than 1 ft. of fill, lap the existing longitudinal bars with the new bars as shown in Table 3. For extensions with more than 1 ft. of fill, lap at least 1 ft. 0 in.
- Ensure that welded splices conform to the requirements of the plans and of Item 448, "Structural Field Welding." Field-prepare ends of reinforcing bars if they will be butt-welded. Delivered bars must be long enough to permit weld preparation.
- Install mechanical coupling devices in accordance with the manufacturer's recommendations at locations shown on the plans. Protect threaded male or female connections, and make sure the threaded connections are clean when making the connection. Do not repair damaged threads.
- Mechanical coupler alternate equivalent strength arrangements, to be accomplished by substituting larger bar sizes or more bars, will be considered if approved in writing before fabrication of the systems.

E. Placing. Unless otherwise shown on the plans, dimensions shown for reinforcement are to the centers of the bars. Place reinforcement as near as possible to the position shown on the plans. In the plane of the steel parallel to the nearest surface of concrete, bars must not vary from plan placement by more than 1/12 of the spacing between bars. In the plane of the steel perpendicular to the nearest surface of concrete, bars must not vary from plan placement by more than 1/4 in. Cover of concrete to the nearest surface of steel must be at least 1 in. unless otherwise shown on the plans.

For bridge slabs, the clear cover tolerance for the top mat of reinforcement is −0, +1/2 in.

Locate the reinforcement accurately in the forms, and hold it firmly in place before and during concrete placement by means of bar supports that are adequate in strength and number to prevent displacement and to keep the steel at the proper distance from the forms. Support bars by standard bar supports with plastic tips, approved plastic bar supports, or precast mortar or concrete blocks when supports are in contact with removable or stay-in-place forms. Use bright basic bar supports to support reinforcing steel placed in slab overlays on concrete panels or on existing concrete slabs. Bar supports in contact with soil or subgrade must be approved.

For bar supports with plastic tips, the plastic protection must be at least 3/32 in. thick and extend upward on the wire to a point at least 1/2 in. above the formwork.

All accessories such as tie wires, bar chairs, supports, or clips used with epoxy-coated reinforcement must be of steel, fully coated with epoxy or plastic. Plastic supports approved by the Engineer may also be used with epoxy-coated reinforcement.

Cast mortar or concrete blocks to uniform dimensions with adequate bearing area. Provide a suitable tie wire in each block for anchoring to the steel. Cast the blocks to the thickness required in approved molds. The surface placed adjacent to the form must be a true plane, free of surface imperfections. Cure the blocks by covering them with wet burlap or mats for a period of 72 hr. Mortar for blocks should contain approximately 1 part hydraulic cement to 3 parts sand. Concrete for blocks should contain 850 lb. of hydraulic cement per cubic yard of concrete.

Place individual bar supports in rows at 4-ft. maximum spacing in each direction. Place continuous type bar supports at 4-ft. maximum spacing. Use continuous bar supports with permanent metal deck forms.

The exposure of the ends of longitudinals, stirrups, and spacers used to position the reinforcement in concrete pipe and in precast box culverts or storm drains is not cause for rejection.

Tie reinforcing steel for bridge slabs, top slabs of direct traffic culverts, and top slabs of prestressed box beams at all intersections, except tie only alternate intersections where spacing is less than 1 ft. in each direction. For reinforcing steel cages for other structural members, tie the steel at enough intersections to provide a rigid cage of steel. Fasten mats of wire fabric securely at the ends and edges.

Before concrete placement, clean mortar, mud, dirt, debris, oil, and other foreign material from the reinforcement. Do not place concrete until authorized.

If reinforcement is not adequately supported or tied to resist settlement, reinforcement is floating upward, truss bars are overturning, or movement is detected in any direction during concrete placement, stop placement until corrective measures are taken.

F. Handling, Placement, and Repair of Epoxy-Coated Reinforcing Steel.

1. **Handling.** Provide systems for handling coated reinforcement with padded contact areas. Pad bundling bands or use suitable banding to prevent damage to the coating. Lift bundles of coated reinforcement with a strongback, spreader bar, multiple supports, or a platform bridge. Transport the bundled reinforcement carefully, and store it on protective cribbing. Do not drop or drag the coated reinforcement.

2. **Construction Methods.** Do not flame-cut coated reinforcement. Saw or shear-cut only when approved. Coat cut ends as specified in Section 440.3.F.3, “Repair of Coating.”

   Do not weld or mechanically couple coated reinforcing steel except where specifically shown on the plans. Remove the epoxy coating at least 6 in. beyond the weld limits before welding and 2 in. beyond the limits of the coupler before assembly. After welding or coupling, clean the steel of oil, grease, moisture, dirt, welding contamination (slag or acid residue), and rust to a near-white finish. Check the existing epoxy for damage. Remove any damaged or loose epoxy back to sound epoxy coating.

   After cleaning, coat the splice area with epoxy repair material to a thickness of 7 to 17 mils after curing. Apply a second application of repair material to the bar and coupler interface to ensure complete sealing of the joint.

3. **Repair of Coating.** For repair of the coating, use material that complies with the requirements of this Item and ASTM D 3963. Make repairs in accordance with procedures recommended by the manufacturer of the epoxy coating powder. For areas to be patched, apply at least the same coating thickness as required for the original coating. Repair all visible damage to the coating.

   Repair sawed and sheared ends, cuts, breaks, and other damage promptly before additional oxidation occurs. Clean areas to be repaired to ensure that they are free from surface contaminants. Make repairs in the shop or in the field as required.

440.4. Measurement and Payment. The work performed, materials furnished, equipment, labor, tools, and incidentals will not be measured or paid for directly but will be considered subsidiary to pertinent Items.

ITEM 441

STEEL STRUCTURES

441.1. Description. Fabricate and erect structural steel and other metals used for steel structures or for steel portions of structures.

441.2. Materials.

A. Base Metal. Use metal that meets Item 442, "Metal for Structures."

B. Approved Electrodes and Flux-Electrode Combinations. Use only electrodes and flux–electrode combinations found on the list of approved electrodes and flux–electrode combinations maintained by the Construction Division. To request that a product be added to this list or to renew an expired approval, submit certified reports of all tests required by the applicable AWS A5 specification according to the applicable welding code (for most construction, AASHTO/AWS D1.5, *Bridge Welding Code*, or AWS D1.1, *Structural Welding Code—Steel*) to the Construction Division, Materials and Pavements Section.

C. High-Strength Bolts. Use fasteners that meet Item 447, "Structural Bolting."

D. Coatings. Provide coating materials, as required, in accordance with Item 445, "Galvanizing," and Item 446, "Cleaning and Painting Steel."

441.3. Construction.

A. General Requirements.

1. **Applicable Codes.** Perform all fabrication in accordance with AASHTO/NSBA Steel Bridge Collaboration S2.1, including fabrication of non-bridge members. Follow all applicable provisions of the appropriate AWS code (D1.5 or D1.1) except as otherwise noted in the plans or in this Item. Weld sheet steel (thinner than 1/8 in.) in accordance with ANSI/AWS D1.3, *Structural Welding Code—Sheet Steel*. Unless otherwise stated, requirements of this Item are in addition to the requirements of S2.1. Perform all bolting in accordance with Item 447, "Structural Bolting."

2. **Primary Members.** Primary members include:
   - webs and flanges of plate, tub, and box girders;
   - rolled beams and cover plates;
   - floor beam webs and flanges;
   - arch ribs and arch tie beams or girders;
   - truss members;
   - diaphragm members for curved plate girders or beams;
   - pier diaphragm members for tub girders;
   - splice plates for primary members; and
   - any other member designated as "primary" or "main" on the plans.

3. **Responsibility.** The Contractor is responsible for the correctness and completeness of shop drawings and for the fit of shop and field connections.

4. **Railroad Structures.** Fabricate railroad underpass structures in accordance with the latest AREMA *Manual for Railway Engineering* and this Item. In the case of a conflict between this Item and the AREMA manual, the more stringent requirements apply.

5. **Qualification of Plant, Laboratories, and Personnel.**

   a. **Fabrication.** The Department will evaluate fabrication plants for competence of the plant, equipment, organization, experience, knowledge, and personnel to produce acceptable work. Plants must be qualified in accordance with S2.1 (or equal acceptable qualification). When AISC certification is required, provide a copy of the certificate and a copy of the complete audit report, including the exit meeting report.

   b. **Nondestructive Examination (NDE).** Personnel performing NDE must be qualified in accordance with the applicable AWS code. Testing agencies and individual third-party

contractors must also successfully complete periodic audits for compliance, performed by the Department. In addition, ultrasound technicians must pass a hands-on test administered by the Construction Division. A technician who fails the hands-on test must wait 6 months before taking the test again. Qualification to perform ultrasonic testing for the Department will be revoked when the technician's employment is terminated, and recertification based on a new hands-on test will be required.

c. Welding Procedure Qualification. Laboratories performing testing for welding procedure qualification must successfully complete periodic audits in accordance with DMS-7360, "Qualification Procedure for Laboratories Performing Welding Procedure Qualification Testing."

6. Drawings.

a. Erection Drawings. Submit 2 copies of erection drawings in accordance with Item 5, "Control of the Work," before erection of railroad underpasses, trusses, field-spliced (welded or bolted) girders, arches, or other members for which erection drawings are required on the plans. Submit an additional copy of the drawings for railroad underpasses. Erection drawings are not required for rolled I-beam units unless otherwise noted on the plans.

Clearly indicate at least:

- procedures;
- sequence of work;
- equipment to be used;
- location of falsework, erection cranes, and holding cranes;
- falsework design details;
- girder lifting points;
- adjacent structures loaded; and
- requirements for releasing cranes during erection that differ from the requirements of this Item or those shown on the plans.

If site conditions differ from those assumed for these drawings, revise the drawings to reflect the actual conditions before continuing the erection work.

b. Shop Drawings. Before fabrication, prepare and submit shop drawings for each detail of the general plans requiring the use of structural steel, forgings, wrought iron, or castings.

(1) Bridge Structures. Unless otherwise approved, prepare drawings in accordance with AASHTO/NSBA Steel Bridge Collaboration G1.3, "Shop Detail Drawing Presentation." Print a bill of material on each sheet, including the Charpy V-Notch (CVN) and fracture-critical requirements, if any, for each piece. Indicate joint details on shop drawings for all welds. Indicate fracture-critical areas of members.

Show a title block in the lower right corner including:

- project identification data including federal and state project numbers,
- sheet numbering for the shop drawings,
- name of the structure or stream,
- name of the fabricator or supplier, and
- name of the Contractor.

Submit 7 copies of shop drawings to the Engineer. Submit an additional copy if the owner is a non-Department entity such as a railroad or a municipal or turnpike authority, and another copy if the designer is a private consultant. The Engineer may require additional sets.

(2) Non-Bridge Structures. Prepare clear and legible shop drawings for the complete assembly on sheets 11 × 17 in. Full-size drawings may be reduced to half-scale size if they are clear and legible. At the left end, provide a 1-1/2-in. margin, with the other margins 1/2 in. wide. Indicate joint details on shop drawings for all welds. Provide a title block on each sheet in the lower right corner with the following information:

- sheet index data shown on the lower right corner of the project plans,
- sheet numbering for the shop drawings,

- name of the fabricator, and
- name of the Contractor.

Furnish 7 copies of completed shop drawings to the Engineer.

7. **Welding and Fabrication Procedures.**

   a. **Welding Procedures.** Before fabrication begins, submit welding procedures in accordance with the applicable AWS code to the Construction Division, Materials and Pavements Section, and notify the Engineer which procedures will be used for each joint or joint type.

   Post the approved welding procedure specification for the welding being performed on each welding machine, or use another approved method of ensuring that the welder has access to the procedure information at all times.

   b. **Fabrication Procedures.** When primary bridge members are fabricated by welding or bolting, submit a fabrication procedure before fabrication begins. The fabrication procedure must include details required by S2.1 as well as:
   - special processes such as planing or facing,
   - details of heat treating and heat straightening procedures, and
   - any other information required by the Engineer.

   Have a fabrication procedure approved for each type of structure (rolled beams with welded or bolted splices, plate girders with welded or bolted splices, tub girders with welded or bolted splices, box girders, plate girder bents, railroad thru-girders and plate girders, truss bridges, orthotropic deck segments, or other major bridge structure types) before starting fabrication.

8. **Submerged-Arc Welding (SAW).** Provide equipment with automatic guidance capable of maintaining the position of the arc and controlling the speed of travel so that, when once set by the operator, little manipulation is needed. Small adjustments to compensate for acceptable plate waviness, acceptable tilt of flange, etc. will be permitted. Do not use hand-held semiautomatic SAW for welding bridge members unless altered to provide automatic guidance or otherwise approved.

9. **Inspection.** Provide approved facilities, materials, and equipment required for inspection in accordance with Article 6.5, "Plant Inspection and Testing," and Item 504, "Field Office and Laboratory." Unless otherwise approved, provide an office meeting the requirements of Section 504.2.B.3, "Type C Structure (Field Office)," except that only 200 sq. ft. are required if fewer than 3 inspectors will be assigned to the facility. Provide desks, a layout table, a plan rack, and Internet service in accordance with DMS-10101, "Computer Equipment." Maintain the office and equipment so that it will continue to function properly for the intended use.

   Provide the Inspector with the helpers and equipment needed to move material to allow inspection. QC is solely the responsibility of the Contractor. The Contractor must have a QC staff qualified in accordance with the applicable AWS code. The QC staff must provide inspection of all materials and workmanship prior to inspection by the Department.

   When structural steel is fabricated outside of the contiguous 48 states, the additional cost of inspection will be in accordance with Article 6.4, "Sampling, Testing, and Inspection."

10. **Documentation.** Before beginning fabrication, provide a completed Material Statement (Form D-9-USA-1) with supporting documentation (such as mill test reports), issued by the producing mill and verified by qualified personnel. The Department will supply blank forms without charge. Ensure that the documentation legibly reflects all information required by the applicable ASTM specifications.

    As material is shipped or placed in approved storage, provide a copy of the shipping or storage invoice that reflects:
    - member piece mark identification and calculated weight per piece from the contract drawings,
    - number of pieces shipped or in storage,
    - total calculated weight for each invoice per bid item, and
    - the unique identification number of the shipping or storage invoice.

The acceptance of material or finished members by the Inspector will not prohibit subsequent rejection if the material or members are found to be damaged or defective. Replace rejected material promptly.

11. **Material Identification.** Assembly-mark individual pieces and issue cutting instructions to the shop using a system that will maintain identity of the original piece.

    Identify structural steel by standard and grade of steel. Also differentiate between material toughness requirements (CVN, fracture-critical) as well as any other special physical requirements. In addition, identify structural steel for primary members by mill identification numbers (heat numbers). Use an approved identification system. Use either paint or low-stress stencils to make identification markings on the metal. Mark the material as soon as it enters the shop and carry the markings on all pieces through final fabrication. Transfer the markings before cutting steel for primary members of bridge structures into smaller pieces. Loss of identification marking on any piece, with no other positive identification, or loss of heat number identification on any primary member piece will render the piece unacceptable for use. Unidentifiable material may be approved for use after testing to establish acceptability to the satisfaction of the Engineer. Have testing performed by an approved testing facility, and have results signed and sealed by a licensed professional engineer.

B. Welding.

1. **Details.**
   - a. **Rolled Edges.** Trim plates with rolled edges used for webs by thermal cutting.
   - b. **Weld Tabs.** Use weld tabs at least 2 in. long for manual and semi-automatic processes and at least 3 in. long for automatic processes, and in all cases at least as long as the thickness of the material being welded. Use longer weld tabs as required for satisfactory work.
   - c. **Weld Termination.** Terminate fillet welds approximately 1/4 in. from the end of the attachment except for galvanized structures and flange-to-web welds, for which the fillet weld must run the full length of the attachment unless otherwise noted on the plans.
   - d. **No-Paint Areas at Field-Welded Connections.** Keep surfaces within 4 in. of groove welds or within 2 in. of fillet welds free from shop paint.
   - e. **Galvanized Assemblies.** Completely seal all edges of tightly contacting surfaces by welding before galvanizing.
2. **Shop Splices.**
   - a. **Shop Splice Locations.** Keep at least 6 in. between shop splices and stiffeners or crossframes and at least 6 in. between web and flange shop splices. Do not add optional splices to plates shown on the plans as 40 ft. long or shorter unless necessary to obtain the required geometry or otherwise approved. Obtain approval for shop splices added after shop drawings are approved.
     - (1) **Continuous Multiple-Span Structures.** Unless otherwise shown on the plans or approved, do not locate tension flange splices within 0.05S of an interior bearing, within 0.10S of the centerline of an interior span, or between 0.30S and 0.50S from an end bearing, where S is the span length between centers of bearings.
     - (2) **Single-Span Structures.** Unless otherwise shown on the plans or approved, do not locate tension flange splices within 0.10S of the centerline of the span.
   - b. **Grinding Splice Welds.** Grind shop groove welds in flange plates smooth and flush with the base metal on all surfaces whether the joined parts are of equal thickness or of unequal thickness. Grind so that the finished grinding marks run in the direction of stress, and keep the metal below the blue brittle range (below 350°F). Groove welds in web plates, except at locations of intersecting welds, need not be ground unless shown on the plans except as required to meet AWS welding code requirements.
3. **Joint Restraint.** Never restrain a joint on both sides when welding.
4. **Stiffener Installation.**

a. **Flange Tilt.** Members must meet combined tilt and warpage tolerances before the installation of stiffeners. Cut stiffeners to fit acceptable flange tilt and cupping. Minor jacking or hammering that does not permanently deform the material will be permitted.

b. **Stiffeners Near Field Splices.** Tack-weld intermediate stiffeners within 12 in. of a welded field splice point in the shop. Weld the stiffeners in the field in accordance with Item 448, "Structural Field Welding," after the splice is made.

5. **Nondestructive Examination (NDE).** Perform magnetic particle testing (MT), radiographic testing (RT), and ultrasonic testing (UT) at the Contractor's expense as specified in D1.5 for bridge structures and D1.1 for all other welding. The Engineer will periodically witness, examine, verify, and interpret NDE. Additional welds may be designated for NDE on the plans. Retest repaired groove welds per the applicable AWS code after repairs are made and have cooled to ambient temperature. Complete NDE and repairs before assembly of parts into a member but after any heat-correction of weld distortion.

   a. **Radiographic Testing.** Radiographs must have a density of at least 2.5 and at most 3.5, as confirmed by a radiographer. The density in any single radiograph showing a continuous area of constant thickness must not vary in this area by more than 0.5. Use only ASTM System Class I radiographic film as described in ASTM E 1815. Use low-stress stencils or other acceptable means to make radiograph and location identification marks on the steel. The Engineer will examine and interpret all results of RT.

   b. **Ultrasonic Testing.** Have UT equipment calibrated yearly by an authorized representative of the equipment manufacturer or by an approved testing laboratory.

   c. **Magnetic Particle Testing.** Orient the prod or pole position normal or parallel to the weld unless otherwise approved. When using the yoke method, use half-wave rectified DC unless otherwise approved.

   d. **Extra-high Strength Steel.** For shop welds on steel that has a nominal yield strength over 70,000 psi, perform RT on all flange and web splices in addition to any requirements of the applicable AWS code. Wait at least 48 hours after completing these welds before inspecting them.

6. **Testing of Galvanized Weldments.** If problems develop during galvanizing of welded material, the Engineer may require a test of the compatibility of the combined galvanizing and welding procedures in accordance with this Section and may require modification of one or both of the galvanizing and welding procedures.

   If testing is required, prepare a test specimen with a minimum length of 12 in. using the same base material, having the same joint configuration, and using the welding procedure proposed for production work. Clean and galvanize this test specimen using the same conditions and procedure that will be applied to the production galvanizing.

   After galvanizing, examine the test specimen. There must be no evidence of excessive buildup of zinc coating over the weld area. Excessive zinc coating buildup will require modification of the galvanizing procedure.

   Remove the zinc from the weld area of the test specimen in accordance with ASTM A 90, and visually examine the weld area. There must be no evidence of loss of weld metal or any deterioration of the base metal due to the galvanizing or welding procedure. If there is evidence of deterioration or loss of weld metal, modify the galvanizing or welding procedure as required and run a satisfactory retest on the modified procedures before production work. Report procedures and results on the galvanized weldment worksheet provided by the Department.

C. **Bolt Holes.** Detail holes on shop drawings 1/16 in. larger in diameter than the nominal bolt size shown on the plans unless another hole size is shown on the plans.

   Thoroughly clean the contact surfaces of connection parts in accordance with Section 447.4.B, "General," before assembling them for hole fabrication. Make holes in primary members full-size (by reaming from a subsize hole, drilling full-size, or punching full-size where permissible) only in assembly unless otherwise approved.

Ream and drill with twist drills guided by mechanical means unless otherwise approved. If subpunching holes, punch them at least 3/16 in. smaller than the nominal bolt size. When numerically controlled (N/C) equipment is used, submit for approval the proposed procedures to accomplish the work from initial drilling or punching through check assembly. Use thermal cutting for holes only with permission of the Engineer. Permission for thermal cutting is not required for making slotted holes, when slotted holes are shown on the plans, by drilling or punching two holes and then thermally cutting the straight portion between them. Perform all thermal cutting in accordance with Section 441.3.E.1, "Thermal Cutting."

Slightly conical holes that naturally result from punching operations are acceptable provided they do not exceed the tolerances of S2.1. The tolerance for anchor bolt hole diameter for bridge bearing assemblies is +1/8 in., −0.

D. Dimensional Tolerances. Meet tolerances of the applicable AWS specifications and S2.1 except as modified in this Section.

1. **Rolled Sections.** Use ASTM A 6 mill tolerances for rolled sections, except that D1.5 camber tolerances apply to rolled sections with a specified camber.
2. **Flange Straightness.** Ensure that flanges of completed girders are free of kinks, short bends, and waviness that depart from straightness or the specified camber by more than 1/8 in. in any 10 ft. along the flange. Rolled material must meet this straightness requirement before being laid off or worked. Plates must meet this requirement before assembly into a member. After straightening a bend or buckle, inspect the surface of the metal for evidence of fracture. The Engineer may require nondestructive testing.
3. **Alignment of Deep Webs in Welded Field Connections.** For girders 48 in. deep or deeper, the webs may be slightly restrained while checking compliance with tolerances of S2.1. In the unrestrained condition, webs 48 in. deep or deeper must meet the tolerances of Table 1. Girders under 48 in. deep must meet the alignment tolerances of S2.1.

Table 1
Web Alignment Tolerances for Deep Girders

Web Depth (in.)	Maximum Web Misalignment (in.)
48	1/16
60	1/8
72	1/4
84	5/16
96	5/16
108	3/8
120	7/16
132	7/16
144	1/2

4. **Bearings.** Correct bearing areas of shoes, beams, and girders using heat, external pressure, or both. Grind or mill only if the actual thickness of the member is not reduced by more than 1/16 in. below the required thickness.
   a. **I-Beams, Plate Girders, and Tub Girders.** The plane of the bearing area of beams and girders must be perpendicular to the vertical axis of the member within 1/16 in. in any 24 in.
   b. **Closed Box Girders.** Meet these tolerances:
      - The plane of the bearing areas of the box girder is perpendicular to the vertical axis of the girder within 1/16 in. across any horizontal dimension of the bearing.
      - The planes of the beam supports on the box girder are true to the vertical axis of the supported beams or girders to 1/16 in. in any 24 in.

      In the shop, verify the plane of all bearing areas with the box placed on its bearings to field grade, using an approved process for verification.
   c. **Shoes.** Meet these tolerances:

- The top bolster has the center 75% of the long dimension (transverse to the girder) true to 1/32 in., with the remainder true to 1/16 in., and is true to 1/32 in. across its entire width in the short dimension (longitudinal to the girder).
- The bottom bolster is true to 1/16 in. across its diagonals.

5. **End Connection Angles.** For floor beams and girders with end connection angles, the tolerance for the length back to back of connection angles is ±1/32 in. If end connections are faced, do not reduce the finished thickness of the angles below that shown on the shop drawings.

E. Other Fabrication Processes.

1. **Thermal Cutting.** Use a mechanical guide to obtain a true profile. Hand-cut only where approved. Hand-cutting of radii for beam copes, weld access holes, and width transitions is permitted if acceptable profile and finish are produced by grinding. Provide a surface finish on thermal-cut surfaces, including holes, in accordance with D1.5 requirements for base metal preparation. Obtain approval before using other cutting processes.
2. **Oxygen-Gouging.** Do not oxygen-gouge ASTM A 588 or A 709 Gr. 50W steel or material with nominal yield strength over 70 ksi.
3. **Annealing and Normalizing.** Complete all annealing or normalizing (as defined in ASTM A 941) before finished machining, boring, and straightening. Maintain the temperature uniformly throughout the furnace during heating and cooling so that the range of temperatures at all points on the member is no greater than 100°F.
4. **Machining.** Machine the surfaces of expansion bearings so that the travel direction of the tool is in the direction of expansion.
5. **Camber.** Complete cambering in accordance with S2.1 before any heat-curving.
6. **Heat Curving.** Heat-curve in accordance with S2.1. The methods in the AASHTO bridge construction specifications are recommended. Attach cover plates to rolled beams before heat-curving only if the total thickness of one flange and cover plate is less than 2-1/2 in. and the radius of curvature is greater than 1,000 ft. For other rolled beams, attach cover plates only after heat-curving is completed. Locate and attach connection plates, diaphragm stiffeners, and bearing stiffeners after curving, unless girder shrinkage is accounted for.
7. **Bending of Quenched and Tempered Steels.** The cold-bending radius limitations for HPS 70W in S2.1 apply to all quenched and tempered steels.

F. Nonconformance Reports (NCRs). When the requirements of this Item are not met, submit an NCR to the Engineer for approval. Include on the NCR:

- date of submittal, nonconformance report number, and IFM number (when applicable);
- project information (county; control, section, and job numbers; project number; shop order number; structure name, etc.);
- member identification (member number, or piece or erection mark);
- description of problem including references to sections of specifications not met;
- explanation of why the problem occurred and plan for preventing future occurrences (if applicable);
- detailed description (including drawings) of proposed solution including a repair proposal; and
- diagrams detailing all pertinent dimensions and locations on relevant sections of shop drawings, including title blocks.

Do not begin repairs before approval is received. Perform all repair work in strict compliance with the approved repair procedure.

G. Shop Assembly.

1. **General Shop Assembly.** Shop-assemble field connections of primary members of trusses, arches, continuous beam spans, bents, towers (each face), plate girders, field connections of floor beams and stringers (including for railroad structures), field-bolted diaphragms for curved plate girders and railroad underpasses, and rigid frames. Complete fabrication, welding (except for shear studs), and field splice preparation before members are removed from shop assembly.

Obtain approval for any deviation from this procedure. The Contractor is responsible for accurate geometry.

Use a method and details of preassembly consistent with the erection procedure shown on the erection plans and camber diagrams. The sequence of assembly may start from any location in the structure and proceed in one or both directions. An approved method of sequential geometry control is required unless the full length of the structure is assembled.

Verify by shop assembly the fit of all bolted and welded field connections between bent cap girders and plate girders or between plate girders and floor beams.

Do not measure horizontal curvature and vertical camber for final acceptance until all welding and heating operations are completed and the steel has cooled to a uniform temperature. Check horizontal curvature and vertical camber in a no-load condition.

2. **Bolted Field Connections.** Each shop assembly, including camber, alignment, accuracy of holes, and fit of milled joints, must be approved before the assembly is dismantled.

   Assemble with milled ends of compression members in full bearing. Assemble non-bearing connections to the specified gap. Ream all subsize holes to the specified size while the connections are assembled, or drill full size while the connections are assembled. Notify the Engineer before shipping if fill plates or shims are added. Adding or increasing the thickness of shims or fill plates in bearing connections requires approval. Use drift pins and snug-tight bolts during the drilling process to ensure that all planes of the connection (webs and flanges) can be assembled simultaneously. Do not use tack welds to secure plates while drilling.

   If parts are not completely bolted in the shop, secure them by temporary bolts to prevent damage in shipment and handling. Never use tack welds in place of temporary bolts.

   Match-mark connecting parts in field connections using low-stress stencils in accordance with the diagram in the erection drawings.

3. **Welded Field Connections.** Mill or grind bevels for groove welds. Do not cut into the web when cutting the flange bevel adjacent to the web. End preparation, backing, and tolerances for single-V groove welds for framing beams or girders must conform to the applicable AWS code unless otherwise shown on the plans.

   In the shop, prepare ends of beams or girders to be field-welded taking into account their relative positions in the finished structure due to grade, camber, and curvature. Completely shop-assemble and check each splice. While the splice is assembled, match-mark it with low-stress stencils in accordance with the diagram in the erection drawings.

H. Finish and Painting.

1. **Shop Painting.** On new steel items to be painted (except for the coatings on box and tub girder interiors), grind corners that are sharp or that form essentially 90º angles to an approximately 1/16-in. flat surface before blast cleaning. (A corner is the intersection of two plane faces.) This requirement does not apply to punched or drilled holes. Apply shop paint in accordance with Item 446, “Cleaning and Painting Steel.” Do not omit shop paint to preserve original markings.

2. **Bearing and Faying Surfaces.** Clean and prepare all bearing and faying surfaces of bolted connections, including those in railroad structures, in accordance with Item 447, “Structural Bolting,” before shipment.

3. **Girder Interiors.** Paint the inside of all box and tub girders in accordance with applicable provisions of Item 446, “Cleaning and Painting Steel.”

4. **Weathering Steel.** Provide an SSPC-SP 6 blast in the shop to all fascia surfaces of unpainted weathering steel beams. Fascia surfaces include:
   - exterior sides of outermost webs and undersides of bottom flanges of plate girders and rolled beams,
   - all outer surfaces of tub girders and box girders,
   - all surfaces of truss members,
   - webs and undersides of bottom flanges of plate diaphragms,
   - bottom surfaces of floor beams, and

- any other surfaces designated as “fascia” on the plans.

Do not mark fascia surfaces. Use one of the following methods as soon as possible to remove any markings or any other foreign material that adheres to the steel during fabrication and that could inhibit the formation of oxide film:

- SSPC-SP 1, “Solvent Cleaning”
- SSPC-SP 2, “Hand Tool Cleaning”
- SSPC-SP 3, “Power Tool Cleaning”
- SSPC-SP 7, “Brush-off Blast Cleaning.”

Do not use acids to remove stains or scales. Feather out touched-up areas over several feet.

5. **Machined Surfaces.** Clean and coat machine-finished surfaces that are in sliding contact, particularly pins and pinholes, with a non-drying, water-repellent grease-type material containing rust-inhibitive compounds. Ensure that the coating material contains no ingredients that might damage the steel. Protect machined surfaces from abrasive blasting.

I. Handling and Storage of Materials. Prevent damage when storing or handling girders or other materials. If damage to material is caused by handling devices or improper storage, remove or repair the material by acceptable means in accordance with ASTM A 6 and the applicable AWS code.

Place stored materials on skids or acceptable dunnage above the ground. Keep materials clean. Shore girders and beams to keep them upright and free of standing water. Place support skids close enough to prevent excessive deflection in long members such as columns. Do not stack completed girders or beams at the jobsite.

Protect structural steel from salt water or other corrosive environments during storage and transit.

J. Marking and Shipping. Mark all structural members in accordance with the erection drawings. If a surface is painted, make the marks over the paint. Do not use impact-applied stencils to mark painted surfaces.

Mark the weight directly on all members weighing more than 3 tons.

Keep material clean and free from injury during loading, transportation, unloading, and storage. Pack bolts of each length and diameter, and loose nuts or washers of each size, separately and ship them in boxes, crates, kegs, or barrels. Plainly mark a list and description of the contents on the outside of each package.

K. Field Erection.

1. **Methods and Equipment.** Do not tack-weld parts instead of using erection bolts. Do not tack-weld parts to hold them in place for bolting. Provide falsework, tools, machinery, and appliances, including drift pins and erection bolts. Provide enough drift pins, 1/32 in. larger than the connection bolts, to fill at least 1/4 of the bolt holes for primary connections. Use erection bolts of the same diameter as the connection bolts.

   Securely tie, brace, or shore steel beams or girders immediately after erection as shown on the plans and the erection drawings. Maintain this bracing or shoring until the diaphragms are in place. Protect railroad or roadway traffic that may be beneath erected girders or beams from falling objects during erection of the members and diaphragms, placement of the deck concrete, and erection and removal of forms. Use nets or flooring with openings no larger than 1 in. for this protection.

2. **Falsework.** Design and construct falsework for the anticipated loads, including wind, and properly maintain this falsework.

3. **Handling and Assembly.** Accurately assemble all parts as shown on the plans and the approved shop drawings. Verify match-marks. Handle parts carefully to prevent bending or other damage. Do not hammer if doing so damages or distorts members. Do not weld any member for transportation or erection unless noted on the plans or approved by the Engineer.

   a. **Welded Connections.** Before releasing the erection cranes, weld flange splices to 50% of their thickness and meet the minimum erection bracing and support requirements shown on the plans and on the submitted erection plans. Field-weld in accordance with Item 448, “Structural Field Welding.”

b. **Bolted Connections.** Before releasing the erection cranes:
   - install 50% of the bolts in the top and bottom flanges and the web with all nuts finger-tight,
   - meet the minimum erection bracing and support requirements shown on the plans and on the submitted erection plans, and
   - for tub girders, install top lateral bracing across the connection and fully tension the bolts connecting the bracing to the top flanges.

   Install high-strength bolts, including erection bolts, in accordance with Item 447, "Structural Bolting." Clean bearing and faying surfaces for bolted connections in accordance with Item 447. Clean the areas of the outside ply under washers, nuts, and bolt heads before bolt installation. Ensure that the required faying surface condition is present at the time of bolting.

4. **Misfits.** Correct minor misfits. Ream no more than 10% of the holes in a plate connection (flange or web), and ensure that no single hole is more than 1/8 in. larger than the nominal bolt diameter. Submit proposed correction methods for members with defects that exceed these limits or that prevent the proper assembly of parts. Straighten structural members in accordance with S2.1. Make all corrections in the presence of the Engineer at no expense to the Department. Do not remove and reweld gusset plates without approval.

5. **Bearing and Anchorage Devices.** Place all bearing devices such as elastomeric pads, castings, bearing plates, or shoes on properly finished bearing areas with full and even bearing on the concrete. Place metallic bearing devices on 1/4-in.-thick preformed fabric pads manufactured in accordance with Item 434, "Elastomeric Bridge Bearings," to the dimensions shown on the plans. Provide holes in the pad that are no more than 1/4 in. larger than the bolt diameter.

   When the concrete bearing area has been placed below grade, build it up to the correct elevation using mortar that meets Item 420, "Concrete Structures," and provide adequate curing. For buildups between 1/8 in. and 3/8 in. thick, use only mortar. If the bearing area must be raised more than 3/8 in., use galvanized steel shims or other approved shim materials in conjunction with mortar.

   Provide at least 75% contact of flange to shoe with no separation greater than 1/32 in. for beams and girders. Make corrections using heat or pressure in accordance with S2.1, or with galvanized shims. Correct small irregularities by grinding.

   Provide at least 85% contact between the rocker plate and the base plate. Adjust the location of slotted holes in expansion bearings for the prevailing temperature. Adjust the nuts on the anchor bolts at the expansion ends of spans to permit free movement of the span. Provide lock nuts or burr the threads.

   Remove all foreign matter from sliding or machine-finished surfaces before placing them in the structure.

   Restore distorted bearing pads or expansion bearings to an equivalent 70ºF position after completion of all welded or bolted splices, using an approved method of relieving the load on the bearing devices.

6. **Erecting Forms.** Do not erect forms until all welding or bolting is complete and the unit is positioned and properly set on the bearing unless otherwise noted on the plans.

7. **Field Finish.** Paint in accordance with Item 446, "Cleaning and Painting Steel." For weathering steel that will remain unpainted, after all welding and slab concrete placement has been completed, restore the steel to a uniform appearance by solvent cleaning, hand cleaning, power brush, or blast cleaning. As soon as possible, remove from all unpainted weathering steel fascia surfaces (as defined in Section 441.3.H.4, "Weathering Steel") any foreign material, including markings, that adheres to the steel and could inhibit formation of oxide film. Feather out touched-up areas over several feet. Do not use acids to remove stains or scales.

441.4. Measurement and Payment. The work performed, materials furnished, equipment, labor, tools, and incidentals will not be measured or paid for directly but will be subsidiary to pertinent Items.

ITEM 442

METAL FOR STRUCTURES

442.1. Description. Provide structural steel, high-strength bolts, forgings, steel castings, iron castings, wrought iron, steel pipe and tubing, aluminum castings and tubing, or other metals used in structures, except reinforcing steel and metal culvert pipe.

442.2. Materials. Furnish mill test reports (MTRs), supplemental test documentation, and certifications required by this and other pertinent Items.

A. Structural Steel. The Engineer may sample and test steel in accordance with ASTM A 370.

1. Bridge Structures. Provide the grade of ASTM A 709 steel shown on the plans. Grade 50W, 50S, or HPS 50W may be substituted for Grade 50 at no additional cost to the Department. For tension members and components, provide steel that meets supplemental requirement S83, "Non-Fracture-Critical, T, Material; Toughness Tests and Marking," for non-fracture-critical applications and S84, "Fracture-Critical, F, Material; Toughness Testing and Marking," for fracture-critical applications. If no AASHTO temperature zone is shown on the plans, use Zone 1.

2. Non-Bridge Structures.

a. Steel Classifications. Provide the types and grades of steel listed in this Section unless otherwise shown on the plans.

(1) Carbon Steel. Meet ASTM A 36

(2) Low-Alloy Steel. Meet the requirements of one of the following standards:

- ASTM A 572 Grade 50 or 55;
- ASTM A 588;
- ASTM A 709 Grade 50, 50S, 50W, or HPS 50W; or
- ASTM A 992.

Specify ASTM A 6 supplemental requirement S18, "Maximum Tensile Strength," for material used for sign, signal, and luminaire supports.

b. Impact Testing. Tension members and components of the following structure types, if more than 1/2 in. thick, and other members designated on the plans must meet the Charpy V-notch (CVN) requirements of Table 1:

- base plates for roadway illumination assemblies, traffic signal pole assemblies, high mast illumination poles, and overhead sign supports;
- arm mounting plates and clamp-on plates for traffic signal pole assemblies;
- pole shafts, ground sleeves, and handhole frames for high mast illumination poles; and
- W-columns, tower pipes, multiple-sided shafts, tower pipe and multiple-sided shaft connection plates, chord angles, chord splice plates or angles, and truss bearing angles for overhead sign supports.

Table 1
CVN Requirements for Non-Bridge Steel

Material	Thickness	Minimum CVN Toughness
ASTM A 36, A 53, A 242, A 500, A 501, A 709 Gr. 36, any other steel with minimum specified yield point below 40 ksi	up to 4"	15 ft.-lb. at 70°F
ASTM A 572[1], A 588[1], A 633[1], any other steel with minimum specified yield point between 40 and 65 ksi, inclusive	up to 2"	15 ft.-lb. at 70°F
	over 2" to 4", mechanically fastened	15 ft.-lb. at 70°F
	over 2" to 4", welded	20 ft.-lb. at 70°F
Any steel with minimum specified yield point over 65 ksi and under 90 ksi[2]	up to 2-1/2"	20 ft.-lb. at 50°F
	over 2-1/2" to 4", mechanically fastened	20 ft.-lb. at 50°F
	over 2-1/2" to 4", welded	25 ft.-lb. at 50°F

1. If the yield point of the material given on the MTR exceeds 65 ksi, reduce the testing temperature by 15°F for each 10-ksi increment or fraction thereof above 65 ksi.
2. If the yield point of the material given on the MTR exceeds 85 ksi, reduce the testing temperature by 15°F for each 10-ksi increment or fraction thereof above 85 ksi.

Use the (H) frequency of testing for material with minimum specified yield point up to and including 50 ksi. Use the (P) frequency of testing for material with minimum specified yield point over 50 ksi. Ensure that steel is sampled and tested in accordance with ASTM A 673.

3. Other Components.

a. Miscellaneous Bridge Components. For members such as steel bearing components not bid under other Items, steel diaphragms for use with concrete bridges, armor joints, and finger joints, provide steel that meets ASTM A 36, A 709 Grade 36, or A 500 Grade B unless otherwise shown on the plans.

b. Shear Connectors and Anchors. For stud shear connectors, slab anchors, and anchors on armor joints and finger joints, provide cold-drawn bars that meet the requirements of ASTM A 108, Grade 1010, 1015, 1018, or 1020, either semi-killed or killed, and that have the tensile properties given in Table 2 after drawing or finishing. Determine tensile properties in accordance with ASTM A 370.

Table 2
Minimum Tensile Properties for Bar Stock

Tensile strength	60 ksi
Yield strength	50 ksi
Elongation	20% (2")
Reduction of area	50%

Provide certification from the manufacturer that the studs or anchors as delivered have the required material properties.

c. Fasteners. Provide high-strength bolts that meet ASTM A 325 or A 490 as shown on the plans. The Department may sample high-strength bolts, nuts, and washers for structural connections in accordance with Tex-719-I.

Follow the requirements of Item 447, “Structural Bolting,” for tests, test reports, and supplemental requirements for high-strength bolts, nuts, and washers.

When ASTM A 325 or A 490 bolts are not shown on the plans, use bolts that meet ASTM A 307 and nuts that meet ASTM A 563.

d. **Slip-resistant Deck Plates.** For deck plates, furnish steel that meets ASTM A 786 and one of A 242, A 588, or A 709 Gr. 50W. State the type and trade name of material to be used on the shop drawings.

e. **Rail Posts.** Provide material for rail posts that meets ASTM A 36 or ASTM A 709 Grade 36 unless otherwise shown on the plans.

B. Steel Forgings. Provide steel forgings for pins, rollers, trunnions, or other forged parts that meet ASTM A 668, Class C, D, F or G, as shown on the plans. For pins 4 in. or smaller in diameter for non-railroad structures, material that meets ASTM A 108, Grades 1016 to 1030, with a minimum yield strength of 36 ksi, may be used instead.

C. Steel Castings. Provide steel castings that meet ASTM A 27, Grade 70-36.

D. Iron Castings. Provide iron castings that are true to pattern in form and dimensions; are free from pouring faults, sponginess, cracks, blow holes, and other defects in positions affecting their strength and value for the service intended; and meet the standards shown in Table 3.

Table 3
Standards for Iron Castings

Casting Material	ASTM Standard	Grade or Class
Gray iron	A 48	35B
Malleable iron	A 47	32510
Ductile iron	A 536	65-45-12

E. Steel Tubing. Provide steel tubing that meets ASTM A 500, Grade B unless otherwise shown on the plans. Tubing that meets API Standard 5L, Grade X52 may be used if produced by a mill listed in the standard API specifications as authorized to produce pipe with the API monogram. Hydrostatic tests are not required for API 5L steel, and instead of a mill test report the manufacturer may furnish a certificate for each lot or shipment certifying that the tubing meets the requirements of this Section.

F. Pipe Rail. "Pipe" includes special extruded and bent shapes. Provide pipe that is rolled, extruded, or cold-pressed from a round pipe or flat plate, and of the section shown on the plans.

If pipe is cold-pressed, ensure that the design of the press and dies results in a pipe of uniform section free from die marks. After the pipe has been formed to the required section, cut it to the lengths required. Make the end cuts and notches at the angles to the axis of the pipe required to produce vertical end faces and plumb posts when required by the plans. Provide a neat and workmanlike finish when cutting and notching pipe.

G. Aluminum. Unless otherwise shown on the plans, provide aluminum materials that meet the standards shown in Table 4.

Table 4
Aluminum Standards

Material	ASTM Standard	Alloy-Temper
Castings	B 108	A444.0-T4
Extrusions	B 221	6061-T6
Sheet or plate	B 209	6061-T6

When testing is required, cut test specimens from castings from the lower 14 in. of the tension flange but not at the junction of the rib or base. Flatten the curved surfaces before machining. Provide standard test specimens in conformance with ASTM E 8.

442.3. Construction.

A. Fabrication, Erection, and Painting. Fabricate, weld, and erect structural metal in accordance with Item 441, "Steel Structures"; Item 447, "Structural Bolting"; Item 448, "Structural Field Welding"; and the applicable AWS welding code. Paint in accordance with Item 446, "Cleaning and Painting Steel." Aluminum or galvanized steel members do not require painting unless otherwise shown on the plans.

B. Galvanizing. Galvanize fabricated steel items, steel or iron castings, bolts, nuts, screws, washers, and other miscellaneous hardware in accordance with Item 445, "Galvanizing." Galvanizing is not required unless specified.

442.4. Measurement. This Item will be measured by the pound of structural metal furnished and placed in a complete structure not including the weight of erection bolts, paint, or weld metal.

This is a plans quantity measurement Item. The quantity to be paid is the quantity shown in the proposal unless modified by Article 9.2, “Plans Quantity Measurement.” Additional measurements or calculations will be made if adjustments of quantities are required.

The maximum percent variance from the plans quantity will be as given in Table 5.

Table 5
Percent Variance

Quantity	Variance
Over 1,000,000 lb.	1/2%
100,000 through 1,000,000 lb.	1%
Under 100,000 lb.	1-1/2%

If the Engineer approves requests for increases in sizes or weights of members, measurement will be made on the sizes or weights shown on the plans.

Castings, bearing plates, anchor bolts, drains, deck plates, armor joints, finger joints, and other metal for which no separate measurement is specified will be included in the total quantity of structural steel.

The weights of rolled materials (such as structural shapes and plate) will be computed on the basis of nominal weights and dimensions using measurements shown on the plans. Deductions will not be made for material that is removed for copes, clips, planing, or weld preparation. The weight of castings will be computed from the dimensions shown on the approved shop drawings. Shoes will be measured by the weights shown on the plans.

Weight of high-strength fasteners will be based on Table 6. Weight of other metal will be based on Table 7.

Splices will be measured as follows:

- No additional weight will be allowed for weld metal in a welded splice.
- Where a bolted splice is permitted as an alternate for a welded splice, measurement will be made on the basis of a welded splice.
- Where a bolted splice is required, the weight of the splice material, bolt heads, washers, and nuts will be measured with no deduction for holes.

Table 6
Pay Weight for High-Strength Fasteners, Pounds per Hundred Units

Diameter	Item		
	Bolt heads	Nuts	Washers
3/4"	15	19	4.8
7/8"	23	30	7.0
1"	32	43	9.4
1-1/8"	45	59	11
1-1/4"	64	79	14

Table 7
Pay Weight for Metals

Material	Weight (lb./cu. in)
Steel	0.2836
Cast iron	0.2604
Wrought iron	0.2777

442.5. Payment. The work performed and materials furnished in accordance with this Item and measured as provided under “Measurement” will be paid for at the unit price bid for “Structural Steel” of the type (Rolled Beam, Plate Girder, Tub Girder, Box Girder, Miscellaneous) specified. This price is full compensation for materials, fabrication, transportation, erection, paint, painting, galvanizing, equipment, tools, labor, and incidentals.

ITEM 445

GALVANIZING

445.1. Description. Galvanize or repair galvanizing on metal items.

445.2. Materials. Provide galvanized metal items that meet the standards in Table 1.

Table 1
Galvanizing Standards

Item	Standard
Fabricated items, rolled, pressed or forged steel shapes, plates, pipes, tubular items, and bars	ASTM A 123
Steel or iron castings	ASTM A 153, Class A
Bolts, nuts, screws, washers, and other miscellaneous hardware	ASTM A 153, Class C or D or ASTM B 695, Class 50
Miscellaneous fasteners	ASTM B 633, Class Fe/Zn 8
Rail elements for metal beam guard fence or bridge railing	AASHTO M 180
Permanent metal deck forms, supporting angles and incidental items	ASTM A 653, Coating Designation G165

445.3. Construction.

A. General. If fabricated members or assemblies are required to be hot-dip galvanized, provide for proper filling, venting, and draining during cleaning and galvanizing. Provide drain holes or slots as required, except where prohibited by the plans. If assembling tapered members using slip-joint splices, drain to the small end of the section. Ensure that cleaning and galvanizing do not produce hydrogen embrittlement.

Before galvanizing material 1/4 in. or greater in thickness:

- remove all sharp burrs and
- chamfer to approximately 1/16 in. all edges exposed to electrical conductors or to human activity.

If painting is specified on galvanized materials, paint in accordance with Item 446, “Cleaning and Painting Steel.” Do not water-quench or chromate-quench galvanized surfaces to be painted.

B. Galvanizing Weldments. If problems develop during galvanizing of welded material, the Engineer may require a test of the compatibility of the combined galvanizing and welding procedures in accordance with Section 441.3.B.6, “Testing of Galvanized Weldments,” and may require modification of one or both of the galvanizing and welding procedures.

C. Workmanship.

1. **Coverage.** Bare spots at most 1/8 in. across are acceptable unless numerous. Repair larger bare spots in accordance with Section 445.3.D, “Repairs.” Runs or drips of zinc coating are acceptable unless they interfere with the intended use of the product. Carefully hand-file excessive zinc accumulations.
2. **Adhesion.** To test coating adhesion, tap the coated area with a small hammer. The coating is acceptable if it is not brittle and does not scale or flake.
3. **Appearance.**
   a. **White Rust.** A white powdery residue indicates moisture. Remove heavy layers of white rust that have caused the coating to pit. Light coatings may remain unless the Engineer requires chemical removal. Remove white rust from articles that will be in direct contact with soil.
   b. **Red Rust.** Red rust on galvanized items indicates uncoated areas. See Section 445.3.C.1, “Coverage,” for acceptance criteria.

c. **Alligator Cracking or Spider Webbing.** The composition of the base metal may cause dark lines resembling alligator skin. See Section 445.3.C.2, "Adhesion," to determine whether the coating is acceptable.

d. **Dull Gray Coating.** The composition of the base metal can cause a dull gray color. See Section 445.3.C.2, "Adhesion," to determine whether the coating is acceptable.

4. **Coating Thickness.** Galvanize to the thickness specified. Use Tex-728-I to determine coating thickness.

D. **Repairs.** Use zinc-based solders, sprayed zinc, or zinc-rich paints for repairs, in accordance with this Section.

1. **Materials.**

a. **Zinc-Based Solders.** Solders used in rod form or as powders:
- zinc–tin–lead alloys with liquidus temperatures in the range of 446°F to 500°F or
- zinc–cadmium alloys with liquidus temperatures in the range of 518°F to 527°F.

b. **Sprayed Zinc (Metallizing).** Zinc coating applied by spraying with droplets of molten metal using wire, ribbon, or powder processes.

c. **Organic Zinc-Rich Paints.** Zinc-rich paints based on organic binders that:
- are premixed and formulated specifically for use on steel surfaces and
- will provide a dried film containing a minimum of 94% zinc dust, by weight.

2. **Repair Processes.**

a. **Zinc-Based Solders.** Remove moisture, oil, grease, dirt, corrosion products, and welding slag or flux from surfaces to be repaired. Clean surface to white metal by wire brushing, light grinding, or mild blasting extending into the surrounding undamaged galvanized coating. Preheat cleaned areas to at least 600°F but not more than 750°F. Wire-brush while heating and evenly distribute a layer of zinc solder. When repair is completed, flush the repaired area with water or wipe with a damp cloth to remove flux residue.

b. **Sprayed Zinc (Metallizing).** Remove oil, grease, corrosion products, and any welding slag or flux from surfaces to be repaired, and ensure that the surfaces are dry. Clean surface to white metal by wire brushing, light grinding, or mild blasting extending into the surrounding undamaged galvanized coating. Apply coating by metal-spraying pistols fed with either zinc wire or zinc powder. Provide a coating that is uniform and free of lumps, coarse areas, or loose particles.

c. **Organic Zinc-Rich Paints.** Do not use paint to repair galvanizing damage caused by welding. Remove oil, grease, corrosion products, and welding slag or flux from surfaces to be repaired, and ensure that the surfaces are clean and dry. Clean surface to near-white metal by wire brushing, light grinding, or mild blasting extending into the surrounding undamaged coating to provide a smooth repair. Spray or brush-apply the paint to the prepared area in accordance with the paint manufacturer's instructions to attain the required dry-film thickness. Provide multiple passes when using spray application.

3. **Repair Coating Thickness.** After completing repair and cooling or curing, measure thickness in the repaired area using Tex-728-I. The minimum thickness required is the same as that required for the specified galvanizing. However, if the repair uses zinc-rich paints, the minimum coating thickness is 50% higher than the specified galvanizing thickness, but not greater than 4.0 mils.

445.4. Measurement and Payment. The work performed, materials furnished, equipment, labor, tools, and incidentals will not be measured or paid for directly but will be considered subsidiary to pertinent Items.

ITEM 447

STRUCTURAL BOLTING

447.1. Description. Furnish and install high-strength bolts for structural connections.

447.2. Materials.

A. General. Use the same supplier for bolts and nuts to ensure proper fit. Have the manufacturer or distributor perform rotational-capacity (R-C) tests in accordance with Tex-452-A on all black or galvanized bolt, nut, and washer assemblies. Test each combination of bolt production lot, nut lot, and washer lot as an assembly and assign an R-C lot number to each lot tested. Test 2 samples from each assigned R-C lot.

Furnish a manufacturer's certified test report (MCTR) or a distributor's certified test report (DCTR) for each R-C lot supplied. Include in the MCTR or DCTR:

- results of the R-C tests,
- R-C lot number,
- manufacturing location for assembly components,
- date and location of tests, and
- a statement that the materials represented by the test report conform to the specifications.

B. Bolts. Use bolts that meet the requirements of ASTM A 325 or A 490 except as modified in this Item. Provide bolts long enough for the installed bolt end to be flush with or outside the face of the nut.

For weathering steel, use Type 3 bolts that meet ASTM A 325 or A 490. Use ASTM A 325 Type 1 for galvanized bolts.

Provide bolts with UNC series threads for diameters less than or equal to 1 in. Provide bolts with 8UN series threads for diameters greater than 1 in.

C. Nuts. Use nuts that meet the requirements of the applicable ASTM bolt specification (ASTM A 325 or A 490) and the applicable ASTM nut specification (ASTM A 563 or A 194) except that grade 2, C3, D, and D3 nuts must have a minimum Rockwell B hardness of 89.

Provide nuts with UNC series threads for diameters less than or equal to 1 in. Provide nuts with 8UN series threads for diameters greater than 1 in.

Ensure that galvanized nuts are lubricated with a lubricant containing a dye of a color that contrasts with the color of the galvanizing. If
ASTM A 563 nuts will be galvanized, order them with supplemental requirement S2.

D. Washers. Use washers that meet the requirements of ASTM F 436 and the applicable ASTM bolt specification (ASTM A 325 or A 490).

E. Storage. Protect all bolts and nuts from dirt and moisture at the job site. Remove from protected storage only those bolts and nuts anticipated to be installed during a workday. Return unused fasteners to protected storage at the end of the day. Do not clean fasteners of lubricant present in the as-delivered condition. As directed, perform at the Contractor's expense a field R-C test in accordance with Tex-452-A on any lot of fasteners that shows signs of rust, dirt, or loss of lubrication. If the fasteners fail the R-C test, apply additional lubrication and rerun the R-C test before installing bolts. Replace any fasteners that cannot be re-lubricated to pass the field R-C test.

F. Sampling and Testing. High-strength bolts, nuts, and washers may be sampled in accordance with Tex-719-I. Perform field R-C tests as directed in accordance with Tex-452-A. Perform installation verification tests required in Section 447.4.A, "Equipment Preparation."

G. Fitup Bolts and Erection Pins. Provide fitup bolts of the same diameter as the connection bolts. Do not reuse galvanized bolts or ASTM A 490 bolts that have been used as fitup bolts. Provide a sufficient number of erection or drift pins, 1/32 in. larger than the bolt diameter.

H. Paint Markers. Provide white or yellow paint markers for marking bolts or nuts for wrench calibration, R-C Tests, and bolt installation.

447.3. Equipment.

A. Testing Equipment. Provide a calibrated tension-measuring device (Skidmore-Wilhelm or equivalent), calibrated torque wrench, and other accessories necessary to perform the installation verification test and the R-C test and to calibrate hydraulic torque wrenches.

B. Wrenches. Furnish either of the following types of wrenches.

1. **Air-Driven Impact Wrenches.** Furnish air-driven impact wrenches, air compressors, and related accessories of sufficient capacity to properly tension high-strength bolts. Impact wrenches should be of sufficient size and capacity to be able to tension fully a bolt in less than 15 seconds. Repair or replace any wrenches that are unable to apply full tension to a bolt within this time.
2. **Hydraulic Torque Wrenches.** Furnish a calibrated hydraulic torque wrench, hydraulic pump, and related accessories capable of properly tensioning high-strength bolts. Calibrate the wrench to stall out or cut out completely when the bolt tension reaches 1.05 times the tension specified in Table 1. Calibrate the wrench by tensioning 3 bolts of each size in a calibrated tension-measuring device (Skidmore-Wilhelm or equivalent). When calibrating the wrench, mark each bolt and verify the rotation from snug-tight as specified in Section 447.4.E.1, "Turn-of-the-Nut Method." Calibrate the wrench at least once each working day or as directed. Recalibrate the wrench for changes in bolt diameter; changes in bolt length greater than two bolt diameters; significant differences in the surface condition of the bolts, threads, nuts, or washers; or changes in the equipment or hose length.

447.4. Construction.

A. Equipment Preparation.

1. **Air-Driven Impact Wrench.** Before beginning bolting, perform an installation verification test on 3 complete fastener assemblies of each combination of diameter, length, grade, and lot to be installed. Use the bolting crew that will perform the actual work for the test, and perform the test in the presence of the Engineer. Follow the bolt-tensioning procedures in Section 447.4.E, "Bolt Tensioning." Use a calibrated tension-measuring device (Skidmore-Wilhelm or equivalent) to verify and demonstrate that the method for estimating the snug-tight condition and controlling the turns from snug-tight develops a tension greater than 1.05 times the tension specified in Table 1. The snug-tight condition is defined as the tightness that exists when the plies of the joint are in firm contact.
2. **Hydraulic Torque Wrench.** Before beginning bolting, calibrate the wrench in accordance with Section 447.3.B.2, "Hydraulic Torque Wrenches." Use the bolting crew that will perform the actual work for the calibration and calibrate the wrench in the presence of the Engineer. Follow the bolt-tensioning procedures in Section 447.4.E, "Bolt Tensioning."

B. General. Ensure that all material within the grip of the bolt is steel. Do not allow any compressible material such as gaskets or insulation within the grip. Ensure that the slope of parts in contact with the bolt head or nut does not exceed 1:20 with respect to a plane normal to the bolt axis. Prepare all joint surfaces, including those in contact with the bolt heads, nuts, or washers, so that the surfaces are free of dirt, loose rust, loose mill scale, burrs, and other matter that would prevent solid seating of the parts.

Replace any bolts and nuts installed for shipping purposes unless the shop drawings indicate that the shop-installed bolts are to be fully tensioned in the shop. Do not tension bolts that have been installed snug-tight in the shop. Remove any bolts installed snug-tight in the shop and replace them with new bolts. Inspect and prepare the joint surfaces after removing shop-installed bolts that are not fully tensioned in the shop.

Provide a hardened washer under either the nut or the bolt head, whichever is turned during tensioning. Install hardened washers under both the nut and bolt head of ASTM A 490 bolts when the outer plies being fastened have a yield strength less than 40 ksi.

Tension all bolts to provide the minimum bolt tension values given in Table 1.

Erect steel in conformance with Item 441, "Steel Structures." Do not tack-weld any parts to eliminate fitup bolts or to hold parts together while bolting.

Table 1
Bolt Tension

Nominal Bolt Size, in.	Minimum Tension (kips)	
	ASTM A 325 Bolts	ASTM A 490 Bolts
1/2	12	15
5/8	19	24
3/4	28	35
7/8	39	49
1	51	64
1-1/8	56	80
1-1/4	71	102
1-3/8	85	121
1-1/2	103	148

C. Preparation of Faying Surfaces. If faying surfaces will be painted, ensure that the primer used is documented to have the required slip and creep characteristics to meet the specified mean slip coefficient as determined by "Testing Method to Determine the Slip Coefficient for Coatings Used in Bolted Joints" in the Research Council on Structural Connections' *Specification for Structural Joints Using ASTM A325 or A490 Bolts*. If no mean slip coefficient or corresponding surface condition is specified, do not paint faying surfaces without approval.

Perform blast-cleaning or painting of faying surfaces in accordance with Item 446, "Cleaning and Painting Steel." Provide an SSPC-SP 10 blast-cleaning if surfaces to be in contact after final bolting will be left unpainted. Do not wire-brush uncoated faying surfaces. Roughen galvanized faying surfaces by hand wire-brushing. Ensure that the required finish exists at the time of bolting.

D. Bolt Installation. Use the following procedure for bolt installation of a complete connection:

1. **Fair-Up Holes.** Use a minimum number of erection or drift pins, as directed, in the holes to "fair-up" all holes.

2. **Install Bolts.** Install bolts in all remaining holes of the connection. Do not use excessive force, which results in damage to the threads, to install the bolts. If force is required to install the bolts, increase the number of erection or drift pins as necessary to align the holes. Do not ream the holes unless approved. If approved, ream the holes in accordance with Section 441.3.K.4, "Misfits." Remove the erection or drift pins and install bolts in these holes. Bring the connection to a full snug-tight condition by snugging systematically from the most rigid part of the connection to the free edges. The snug-tight condition is defined as the tightness that exists when the plies of the joint are in firm, full contact. A snug-tight condition can usually be attained by a few impacts of an impact wrench or the full effort of a worker using an ordinary spud wrench as demonstrated in the installation verification test. As necessary, re-snug previously snugged bolts that may have relaxed as a result of the subsequent snugging of adjacent bolts to insure that all bolts are simultaneously snug-tight and the connection plates are in full contact.

   If snugging does not bring the plies of the joint into full contact, fully tighten a minimum number of bolts as directed until the plies are in full contact. Mark these bolts as fitup bolts. A non-galvanized ASTM A 325 bolt of the same diameter may be used as a fitup bolt in connections requiring the use of galvanized ASTM A 325 bolts or ASTM A 490 bolts. Re-snug all remaining bolts.

3. **Tension Bolts.** Tension all bolts other than the fitup bolts in accordance with Section 447.4.E, "Bolt Tensioning." Loosen all fitup bolts after tensioning all the other bolts in the connection. Ungalvanized ASTM A 325 bolts used as fitup bolts may be reused in a connection using this type of bolt. Replace all galvanized bolts and ASTM A 490 bolts used as fitup bolts. Tension these remaining untensioned bolts in accordance with Section 447.4.E.

4. **Bolt Reuse.** Do not reuse ASTM A 490 or galvanized ASTM A 325 bolts. Ungalvanized ASTM A 325 bolts may be reused one time if the threads have not been damaged. Retensioning

previously tensioned bolts loosened by the tensioning of adjacent bolts is not considered to be reuse.

E. Bolt Tensioning. Install bolts and bring them to a snug-tight condition in the sequence described in Section 447.4.D, "Bolt Installation." Use either the turn-of-the-nut method or the calibrated wrench method to tension high-strength bolts. For either method, ensure that the element not turned by the wrench (bolt head or nut) does not rotate.

1. **Turn-of-the-Nut Method.** Match-mark the nuts and the protruding bolt ends after the bolts have been brought up to snug-tight condition and before final tensioning so that actual rotation can be determined. Tension all bolts in the connection to their final tension by the amount of rotation specified in Table 2. Start final tensioning at the center or most rigid part of the connection and progress toward the free edges.
2. **Calibrated Wrench Method.** Use a calibrated hydraulic torque wrench to tension all bolts to 1.05 times the tension given in Table 1 after they have been brought to the snug-tight condition. Calibrate the wrench in accordance with Section 447.3.B.2, "Hydraulic Torque Wrenches." Start tensioning at the most rigid part of the connection and proceed to the free edges. Return the wrench to re-tension previously tensioned bolts that may have relaxed as a result of the subsequent tensioning of adjacent bolts. Place marks on the socket at one-third points so that the amount of rotation can be visually determined.

Table 2
Nut Rotation from Snug-Tight Condition[1]

Bolt length (underside of head to end of bolt)	Disposition of Outer Face of Bolted Parts		
	Both faces normal to bolt axis	**One face normal to bolt axis and other face sloped less than 1:20 (beveled washer not used)**	**Both faces sloped less than 1:20 from bolt axis (beveled washer not used)**
Up to and including 4 bolt diameters	1/3 turn	1/2 turn	2/3 turn
Over 4 bolt diameters up to and including 8 diameters	1/2 turn	2/3 turn	5/6 turn
Over 8 bolt diameters up to and including 12 diameters[2]	2/3 turn	5/6 turn	1 turn

1. Nut rotation is relative regardless of the element (nut or bolt) being turned. The tolerance is ±30º for bolts installed by 1/2 turn or less and 45º for bolts installed by 2/3 turn or more.
2. For bolt lengths greater than 12 diameters, determine the required rotation using the installation verification test in a simulated connection of solidly fitted steel.

447.5. Measurement and Payment. Installation and testing of bolts will not be paid for directly but will be subsidiary to the pertinent Items requiring the use of high-strength bolts.

When payment for the structure associated with the bolts is made under Item 442, "Metal for Structures," bolts, nuts, and washers will be paid for in accordance with Item 442.

ITEM 448

STRUCTURAL FIELD WELDING

448.1. Description. Field-weld metal members using the shielded metal arc and flux-cored arc welding processes.

448.2. Materials. Provide electrodes for shielded metal arc welding (SMAW) conforming to the requirements of the latest edition of ANSI/AWS A5.1, "Specifications for Mild Steel Covered Arc Welding Electrodes," or ANSI/AWS A5.5, "Specifications for Low-Alloy Steel Covered Arc Welding Electrodes."

Provide electrodes for flux-cored arc welding (FCAW) conforming to the requirements of the latest edition of ANSI/AWS A5.20, "Specification for Carbon Steel Electrodes for Flux Cored Arc Welding," or ANSI/AWS A5.29, "Specification for Low-Alloy Steel Electrodes for Flux Cored Arc Welding."

Provide electrodes and flux-electrode combinations named on the approved list maintained by the Materials and Pavements Section of the Construction Division. To request that a product be added to this list or to renew an expired approval, the Contractor or the consumable manufacturer must submit certified reports of all tests required by the applicable AWS A5 specification according to the applicable welding code to the Construction Division, Materials and Pavements Section. For most structural steel construction, the applicable welding code is AASHTO/AWS D1.5, Bridge Welding Code, or ANSI/AWS D1.1, Structural Welding Code—Steel. For reinforcing steel, the applicable code is ANSI/AWS D1.4, Structural Welding Code—Reinforcing Steel. Tests must be conducted on electrodes of the same class, size, and brand and manufactured by the same process and with the same materials as the electrodes to be furnished. Resubmit electrodes or flux-electrode combinations every 12 months for renewal.

Table 1 shows the classes of electrodes required. Use electrodes with the type of current, with the polarity, and in the positions permitted by AWS A5.1 and A5.5 for SMAW. AWS A5.20 and A5.29 specifications govern for FCAW. Obtain approval for electrode use on steel not listed in Table 1.

Table 1
Classification of Electrodes Permitted

Type of Steel (ASTM Standards)	Electrode Specification	Process	Filler Metal Requirements
Steel piling Armor joints A 500 A 501	AWS A5.1 or A5.5	SMAW	E60XX E70XX or E70XX-X
	AWS A5.20 or A5.29	FCAW	E6XTX-X E7XTX-X (except -2, -3, -10, -GS)
A 36 A 572 Gr. 50 A 588 A 242 A 709 Gr. 36. 50, or 50S	AWS A5.1 or A5.5	SMAW	E7016 E7018 E7028
	AWS A5.20 or A5.29	FCAW	E7XT-1 E7XT-5 E7XT-6 E7XT-8
Weathering steel A 588 A 242 A 709 Gr. 50W	AWS A5.5	SMAW	E8018-W E8016-C3 E8018-C3 E8016-C1 E8018-C1 E8016-C2 E8018-C2
	AWS 5.29	FCAW	E8XT1-W E8XTX-Ni1 E8XTX-Ni2 E8XTX-Ni3
A 709 Gr. HPS 70W	AWS A5.5	SMAW	E9018-M-H8R
Reinforcing steel Grade 40	AWS A5.1 or A5.5	SMAW	E70XX
Reinforcing steel Grade 60	AWS A5.5	SMAW	E90XX
Permanent metal deck forms	AWS A5.1 or A5.5	SMAW	E6010 E6011 E6013 E7018

Note: Low-hydrogen electrodes applicable to the lower strength base metal may be used in joints involving base metals of different yield points or strengths.

E7010 and E8010 electrodes may be used when welding the root passes of beam and girder splices if the requirements of Section 448.4.C.5.a, "High-Cellulose Electrodes for Root Passes," are met.

When welding fracture-critical applications, use electrodes meeting the diffusible hydrogen requirements for fracture-critical welding in AASHTO/AWS D1.5.

For FCAW, use gas or gas mixtures that are welding grade and have a dew point of −40ºF or lower. Furnish certification to the Engineer that the gas or gas mixture is suitable for the intended application and will meet the dew point requirements.

448.3. Equipment. Provide electrode drying and storing ovens that can maintain the required temperatures specified in Section 448.4.C.1, "Electrode Condition," along with thermometers for checking and controlling the oven temperatures. Provide preheating equipment that can maintain the entire joint at or above the specified temperature. Provide approved equipment for checking preheat and interpass temperatures at all times while welding is in progress. Provide welding equipment meeting the

requirements of the approved welding procedure specification (WPS), if required, and capable of making consistent high-quality welds.

448.4. Construction.

A. Procedure Qualification. Use the proper classification and size of electrode, arc length, voltage, and amperage for the thickness of the material, type of groove, welding positions, and other circumstances of the work.

Submit WPS's for FCAW, qualified in accordance with AASHTO/AWS D1.5, for approval before any field welding on a project.

B. Welder Qualification. Provide Department certification papers for each welder for each welding process to be used before welding, except for miscellaneous welds described in Section 448.4.B.1.a, "Miscellaneous Welding Applications." Certification is issued by the Department as described in Section 448.4.B.2, "Certified Steel Structures Welder."

1. **Miscellaneous Welding.** A qualified welder is an experienced welder who is capable of making welds of sound quality but does not have Department certification papers. Before welding begins, the Engineer will check the welder's ability by conducting a job-site test in accordance with Section 448.4.B.1.b, "Miscellaneous Weld Qualification Test." Furnish all materials and equipment necessary for this test.

   a. **Miscellaneous Welding Applications.** A welder certified for structural or reinforcing steel or a qualified welder may make miscellaneous welds of the following types:
      - splicing reinforcing steel to extend bars in the bottom of a drilled shaft;
      - attaching chairs to the reinforcing steel cage of a drilled shaft;
      - armor joints and their supports;
      - screed rail and form hanger supports where permitted on steel units;
      - reinforcing steel to R-bars for lateral stability between prestressed beams, spirals, or bands to reinforcing bars in drilled shaft cages;
      - permanent metal deck forms;
      - additional steel added in railing when slip-form construction is used; and
      - other similar miscellaneous members that have no load-carrying capacity in the completed structure.

   b. **Miscellaneous Weld Qualification Test.** A qualified welder must pass a job-site Miscellaneous Weld Qualification Test before welding:
      - Make a single-pass fillet weld of 1/4-in. maximum size in the vertical position approximately 2 in. long on 1/2-in. plate in the location shown in Figure 1. Use the same electrode proposed for the work.
      - The Engineer will visually inspect the fillet weld for a reasonably uniform appearance and then rupture the weld as shown in Figure 2 with a force or by striking it with a hammer.
      - The fractured surface of the weld will be inspected to ensure complete penetration into the root of the joint, complete fusion to the base metal, and no inclusion or porosity larger than 3/32 in. in its greatest dimension.

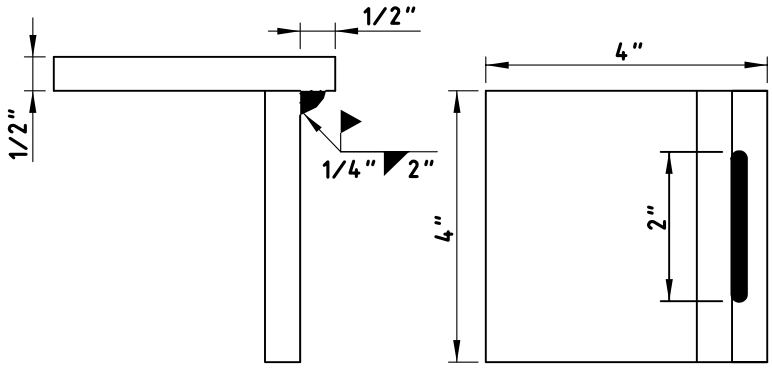

Figure 1
Miscellaneous qualification—fillet weld break specimen.

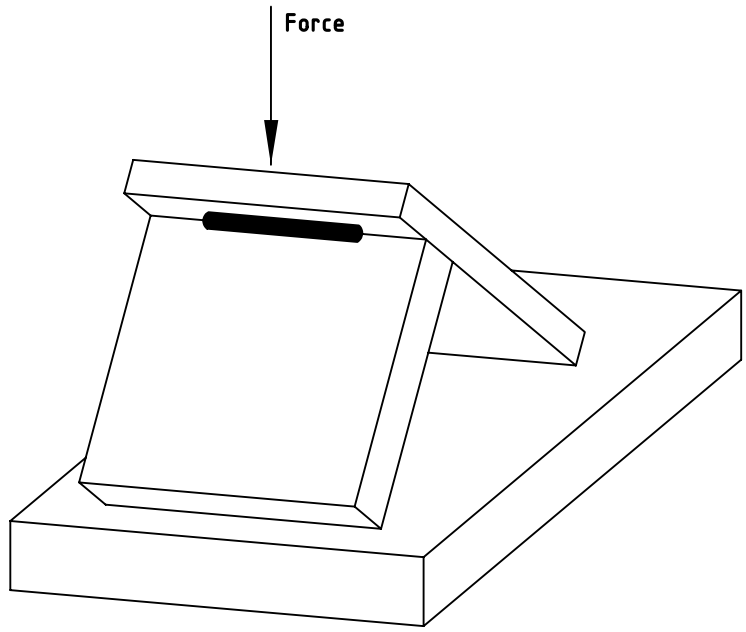

Figure 2
Miscellaneous qualification—method of rupturing specimen.

A welder who fails the Miscellaneous Weld Qualification Test may take a retest under the following conditions:

- The retest occurs immediately and consists of 2 test welds as described above with both test specimens meeting all of the requirements.
- The retest occurs after 30 days if the welder provides evidence of further training or practice. In this case the test consists of a single test weld.

Qualification by the Miscellaneous Weld Qualification Test is effective immediately upon satisfactory completion of the test and remains in effect for the duration of a project.

2. **Certified Steel Structures Welder.** Before making non-miscellaneous welds on structural steel, a welder must pass the AASHTO/AWS D1.5 qualification test for groove welds for plates of unlimited thickness in the vertical (3G) and overhead (4G) positions with the following additional requirements:
   - Use metal for test plates that meets Item 442, "Metal for Structures," with a minimum yield point of 50 ksi.

- Use approved electrodes meeting the required class in accordance with Table 1 and, in the case of FCAW, in accordance with the approved WPS.
- Have a radiographic inspection performed on the weld on each test plate. Any porosity or fusion-type discontinuity with greatest dimension larger than 1/16 in. found in the weld will result in failure of the test. Discontinuities with greatest dimension less than 1/16 in. are acceptable provided the sum of their greatest dimensions does not exceed 3/8 in. in any inch of weld.
- Have two side-bend specimens prepared, tested, and inspected for each test plate.

The test must be administered by an approved laboratory. Submit 2 copies of the certification issued by the laboratory, all accompanying test papers, and the radiographic films to the Bridge Division for review. The Bridge Division issues Department certification papers if the laboratory's certification is approved. A welder must also demonstrate to the Engineer a thorough knowledge of the required welding procedures together with the ability and desire to follow them and make welds of sound quality and good appearance. The certification issued by an approved laboratory is accepted for 1 month from the time of certification, during which time the welder may work on Department projects if the work is satisfactory. Certification papers issued by the Department remain in effect as long as the welder performs acceptable work as determined by the Bridge Division. The certification may be cancelled at any time if the welder's work is not acceptable.

For SMAW, a welder certified using EXX18 electrodes is qualified to weld with all approved SMAW electrodes up to E90XX to join metals with a maximum specified yield strength of 65 ksi.

C. Welding Steel Structures.

1. Electrode Condition.

a. SMAW. For electrodes with low-hydrogen coverings conforming to AWS A5.1, dry in conformance with the manufacturer's written drying instructions or dry for at least 2 hours between 450°F and 500°F. For electrodes with low-hydrogen coverings conforming to AWS A5.5, dry for at least 1 hour between 700°F and 800°F or as specified by the electrode manufacturer. If using electrodes from a newly opened undamaged hermetically sealed container, drying is not required. Immediately after drying or removal from hermetically sealed container, store electrodes in ovens held at a temperature of at least 250°F. Elapsed time permitted between removal of an electrode from the storage oven or hermetically sealed container and use of the electrode is given in Table 2.

Table 2
SMAW Electrode Exposure Limits

Electrode Type	Exposure Time (hours)
E70	4
E80	2
E90	1

If electrodes are placed back in the holding oven before the times given in Table 2 have lapsed, leave them in for at least 4 hours at 250°F before reusing. The Engineer may reduce times allowed for use without redrying in humid atmospheres. Do not redry electrodes more than once. Do not use electrodes with flux that has been wet, cracked, or otherwise damaged.

b. FCAW. Protect or store welding wire coils removed from the original package to keep their characteristics or welding properties intact. Do not use coils or portions of coils that are rusty.

c. Special Applications. For fracture-critical applications or when welding steel not shown in Table 1, dry electrodes in accordance with the manufacturer's specifications and AASHTO/AWS D1.5.

2. Environmental Conditions. Do not weld when the air temperature is lower than 20°F; when surfaces are wet or exposed to rain, snow, or wind; or when operators are exposed to inclement conditions. Provide wind breaks to protect welding operations from winds greater than 5 MPH.

3. **Assembly and Fitup.** Verify that ends of members to be welded are prepared in accordance with the welded joint detail specified. For girder splices, see Figures 3, 4, and 5 for proper end preparation and weld details.

   Bring the parts to be joined by fillet welds into as close contact as possible, not separated more than 3/16 in. If the separation is 1/16 in. or more, increase the leg of the fillet weld by the amount of the separation. Keep the separation between faying surfaces of lap joints and of butt joints landing on backing strips to no more than 1/16 in.

   Make suitable allowance for shrinkage, and never restrain the joint on both sides in any welding process.

   Use the following fitup procedure for groove welds for butt joints:

   - Align splices of beams and girders joined by groove welds with the center of gravity of both cross sections coinciding or each flange vertically offset equally. Fit beams and girders with offset webs with the webs aligned and the flanges offset laterally. When flanges are offset or abutting parts differ in thickness or width by more than 1/8 in., make the joint with a smooth transition between offset surfaces and with a slope of no more than 1:4.
   - Space members to provide a 3/16-in. root opening at the nearest point. At other points of the joint when the spacing provides up to a 7/16-in. opening, correction may be made by buildup up to 1/8 in. on each bevel nose. Rebevel openings exceeding 7/16 in. and move the parts to be joined closer together to bring the joint within the maximum buildup limits. Allow buildups to cool to the maximum preheat and interpass temperatures before welding the joint.
   - Bring all members into correct alignment and hold them in position by acceptable clamps while welding.

   Complete all butt splices before welding diaphragms or sway bracing in a particular section of a unit. Diaphragms and sway bracing may be welded in a unit behind the splice welding to provide stability except where such welding interferes with butt splice adjustments, such as at a drop-in segment of a continuous unit. Complete all splices before welding beams or girders to shoes.

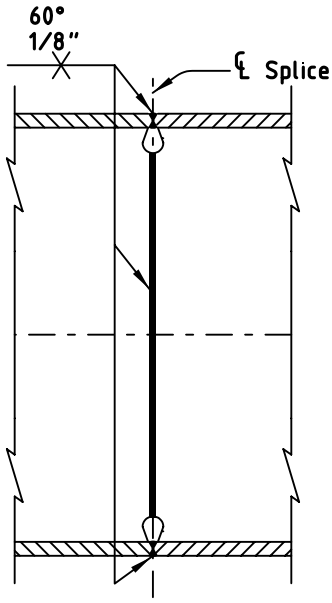

Figure 3
Girder splice details.

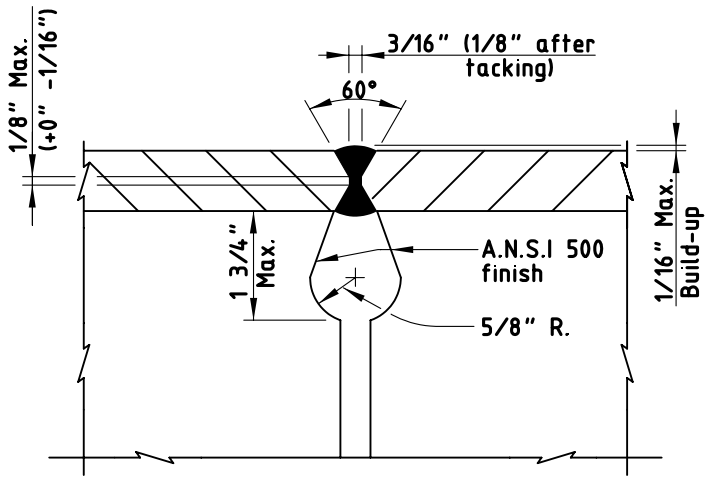

Figure 4
Girder splice details (flange).

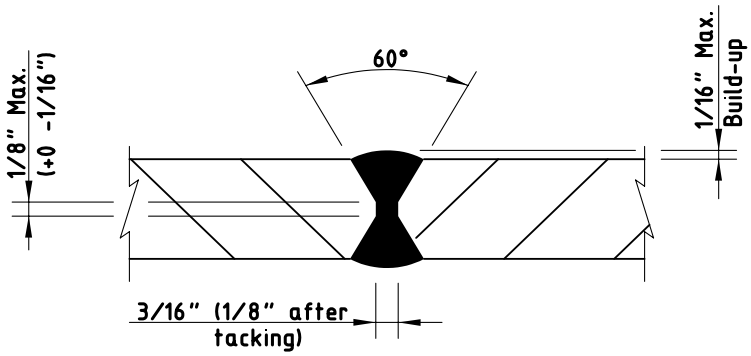

Figure 5
Girder splice details (web).

4. **Preheat.** Preheat ahead of welding both groove and fillet welds (including tack welding) to the temperatures shown in Table 3. Keep preheat and interpass temperatures high enough to prevent cracks. The preheat temperatures shown in Table 3 are minimums, and higher preheats may be necessary in highly restrained welds. When the base metal is below the required temperature, preheat it so that parts being welded are not cooler than the specified temperature within 3 in. of the point of welding.

   Measure preheat temperature on the side opposite to which the heat is applied at points approximately 3 in. away from the joint.

   When possible, completely weld a joint before allowing it to cool below the specified temperature. Always deposit enough weld to prevent cracking before allowing a joint to cool. Do not allow preheat and interpass temperatures to exceed 400°F for thickness up to 1-1/2 in. and 450°F for greater thicknesses.

Table 3
Minimum Preheat and Interpass Temperature
for Welding with Low-Hydrogen Electrodes

Thickest Part at Point of Welding	Temperature
Up to 3/4 in., inclusive	50°F
More than 3/4 in. up to 1-1/2 in., inclusive	70°F
More than 1-1/2 in. up to 2-1/2 in., inclusive	150°F
More than 2-1/2 in.	225°F

When E7010 or E8010 electrodes are used for tacking or temporary root pass, preheat the material in accordance with Table 4.

Table 4
Minimum Preheat Temperature for Welding with E7010 or E8010 Electrodes

Thickest Part at Point of Welding	Temperature
1/2 in. and less	150°F
9/16 in. through 3/4 in.	200°F
13/16 in. through 1-1/2 in.	300°F
More than 1-1/2 in.	400°F

Use preheat and interpass temperatures for the thicker plate thickness when joining steels of different thickness.

When the base metal temperature is below 32°F, preheat to at least 70°F and maintain this minimum temperature during welding. If the base metal is moist, preheat it to 200°F before starting to weld.

5. **Welding Practice.** Use an approved procedure to control shrinkage and distortion. For FCAW, weld in accordance with an approved WPS. Weld as required by the Contract or erection drawings. Do not change the location or size of welds without approval. Do not make temporary welds for transportation, erection, or other purposes on main members except as shown on the plans or approved. Use a crayon, paint, or other approved method to mark each groove weld to identify the welder who performed the work.

   Use the stringer-bead technique where possible for groove welds. In vertical welding passes, progress upward using a back-step sequence.

   Begin and terminate groove welds at the ends of a joint on extension bars. Make edge preparation and thickness of extension bars the same as that of the member being welded but extending at least 2 in. beyond the joint. After the weld is completed and cooled, remove extension bars with a cutting torch or arc-air gouging, and grind the flange edges smooth. If any defects are exposed by the grinding, clean them, fill them with weld metal, and regrind them to a uniform finish. Grind so that grind marks are parallel to the flange, and avoid excess grinding of the parent metal. Clean and fuse tack welds thoroughly with the final weld. Remove defective, cracked, or broken tack welds.

   Gouge, chip, or otherwise remove the root of the initial weld to sound metal for all groove welds, except those produced with the aid of backing or those on steel piling or armor joints, before welding is started on the second side. Thoroughly clean the back side before placing the backup pass. For groove welds made with steel backing, thoroughly fuse the weld metal with the backing, and use backing that is continuous for the full length of the weld. Make a continuous length of backing by welding shorter sections together only under the following conditions:

   - All splices in the backing are complete joint penetration (CJP) groove welds made with the same controls as similar CJP groove welds in the structure.
   - The welds are radiographed and examined as described in Section 448.4.C.7, "Radiographic Inspection," to ensure weld soundness.
   - All welding and testing of the backing is complete before the backing is used to make the structural weld.

   a. **High-Cellulose Electrodes for Root Passes.** E7010 and E8010 electrodes may be used when welding the root passes of beam and girder splices if the work is preheated in accordance with Table 4. After the root passes are backed up, completely remove the E7010 or E8010 electrode pass by arc-air gouging, and replace it using a low-hydrogen electrode.

   b. **Welding Sequence.** Make beam and girder splices using the sequences shown in Figure 6. (Some members will require fewer or more passes than Figure 6 shows.) Alternate welds from flat to overhead to prevent heat buildup along bevel edge. Arrange the passes between the top and bottom flange to maintain balance and symmetry.

For both rolled I-beams and built-up girders, place passes 1, 2, and 3 in the top flange, followed by passes 4, 5, and 6 in the bottom flange (see Figure 6). Gouge out and replace passes 1 and 4, which always are placed in the overhead position. Next, place passes 7, 8, and 9 in the top flange, followed by passes 10, 11, and 12 in the bottom flange. Continue with placing passes 13–17 in the top flange, followed by passes 18–22 in the bottom flange. Continue to alternate welding between top and bottom flange with a maximum of 5 passes per flange until the flange splices are complete. Tack weld web after aligning girder webs with short tacks as required to obtain proper alignment. Place pass 23 and pass 24 on the web. Gouge out and replace pass 23. Finish web splice with pass 25.

For each layer, each bead, and the crater area, remove all slag and clean the weld and adjacent base metal before welding over previously deposited metal. Avoid arc strikes, and if they occur, grind resulting cracks and blemishes out to a smooth contour and check them visually to ensure soundness.

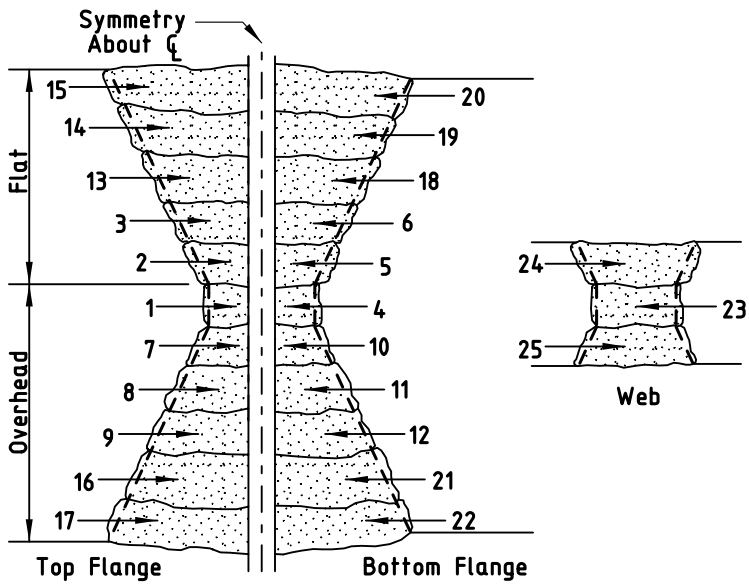

Figure 6
Welding sequence for splices for material up to 50,000-psi yield strength.

Deviation from the above sequence of weld passes requires approval. Obtain approval from the Bridge Division for welding procedures and sequences for special connections.

c. Electrode Size and Weld Layer Thickness.

(1) SMAW.

(a) Electrode Size. Use electrodes with the following maximum size:

- 1/4 in. for all welds made in the flat position except root passes,
- 1/4 in. for horizontal fillet welds,
- 1/4 in. for root passes of fillet welds made in the flat position and of groove welds made in the flat position with backing and with a root opening of 1/4 in. or more,
- 5/32 in. for welds made with low hydrogen electrodes in the vertical and overhead positions, and
- 3/16 in. for all other welds.

(b) Weld Size and Layer Thickness. Make the root pass large enough to prevent cracking. Make layers subsequent to the root pass in fillet welds and all layers in groove welds of the following maximum thickness:

- 1/4 in. for root passes of groove welds;
- 1/8 in. for subsequent layers of welds made in the flat position; and
- 3/16 in. for subsequent layers of welds made in the vertical, overhead, and horizontal positions.

Make fillet welds passes no larger than:

- 3/8 in. in the flat position,
- 5/16 in. in the horizontal or overhead positions, and
- 1/2 in. in the vertical position.

(2) FCAW.

(a) Electrode Size. Use electrodes with the following maximum size:

- 5/32 in. for the flat and horizontal positions,
- 3/32 in. for the vertical position, and
- 5/64 in. for the overhead position.

(b) Weld Size and Layer Thickness. Make weld layers, except root and surface layers, no thicker than 1/4 in. When the root opening of a groove weld is 1/2 in. or wider, use a multiple-pass split-layer technique. Use the split-layer technique to make all multiple-pass welds when the width of the layer exceeds 5/8 in.

Ensure that each pass has complete fusion with adjacent base metal and weld metal and that there is no overlap, excessive porosity, or undercutting.

Do not use FCAW with external gas shielding in a draft or wind. Furnish an approved shelter of material and shape to reduce wind velocity near the welding to a maximum of 5 MPH.

Make fillet weld passes no larger than:

- 1/2 in. in the flat position,
- 3/8 in. in the horizontal or overhead positions, and
- 5/16 in. in the vertical position.

6. **Weld Quality.** Provide welds that are sound throughout with no cracks in the weld metal or weld pass. Completely fuse the weld metal and the base metal and each subsequent pass. Keep welds free from overlap, and keep the base metal free from undercut more than 1/100 in. deep when the direction of undercut is transverse to the primary stress in the part that is undercut. Fill all craters to the full cross section of the welds.

7. **Radiographic Inspection.** Conduct radiographic testing (RT) as required in the field at the expense of the Contractor by an agency or individual registered and licensed to perform industrial radiography. Follow all applicable rules and regulations for radiographic operations. Testing includes furnishing all materials, equipment, tools, labor, and incidentals necessary to perform the required testing. The Department may require further tests in accordance with Article 5.7, "Inspection," and may perform additional testing, including other methods of inspection.

   Perform RT in accordance with AASHTO/AWS D1.5. The Engineer will examine and interpret the resulting radiographs in accordance with AASHTO/AWS D1.5. All radiographs become the property of the Department and remain with the Engineer.

   For field welds of splices in beams or girders, radiographically inspect the full flange width of all flange splices and the top and bottom 1/6 of the web at each splice. Radiographically retest repaired welds. Make necessary repairs before any further work is done. Additional RT required because of unacceptable welding or poor radiograph quality is at the Contractor's expense. RT of particular welds required by the plans is in addition to the RT required by this Item.

8. **Corrections.** When welding is unsatisfactory or indicates inferior workmanship, the Engineer will require corrective measures and approve the subsequent corrections.

   Use oxygen gouging or arc-air gouging when required to remove part of the weld or base metal. Do not use oxygen gouging on weathering steel. Backgouge splices in beams and girders or cut out defective welds using arc-air gouging by a welder qualified to make beam and girder splices.

Where corrections require depositing additional weld metal, slope the sides of the area to be welded enough to permit depositing new metal.

Where corrections require depositing additional weld metal, use a smaller electrode than that used for the original weld. Clean surfaces thoroughly before rewelding.

Remove cracked welds completely and repair. If crack length is less than half the length of the weld, remove the weld metal for the length of the crack plus 2 in. beyond each end of the crack, and repair.

Where work performed after making a deficient weld has made the weld inaccessible or has caused new conditions making the correction of the deficiency dangerous or ineffectual, restore the original conditions by removing welds, members, or both before making the necessary corrections; otherwise, compensate for the deficiency by performing additional work according to a revised and approved design.

Cut apart and reweld improperly fitted or misaligned parts.

Straighten members distorted by the heat of welding using mechanical means or the carefully supervised application of a limited amount of localized heat. Do not let heated areas exceed 1,200°F as measured by temperature-indicating crayons or other approved methods for steel up to 65,000 psi yield strength. Do not let heated areas exceed 1,100°F for higher-strength steels. Keep parts to be heat-straightened substantially free of stress from external forces except when mechanical means are used with the application of heat. Before straightening, submit a straightening procedure to the Engineer for approval.

Correct defective or unsound welds either by removing and replacing the entire weld or as follows.

a. **Excessive Convexity.** Reduce to size by grinding off the excess weld metal, leaving a smooth profile.

b. **Shrinkage Cracks, Cracks in Base Metal, Craters, and Excessive Porosity.** Remove defective portions of base and weld metal down to sound metal, and replace with additional sound weld metal.

c. **Undercut, Undersize, and Excessive Concavity.** Clean and deposit additional weld metal.

d. **Overlap and Incomplete Fusion.** Remove and replace the defective portion of weld.

e. **Slag Inclusions.** Remove the parts of the weld containing slag, and replace them with sound weld metal.

f. **Removal of Base Metal during Welding.** Clean and form full size by depositing additional weld metal using stringer beads.

D. **Welding Reinforcing Steel.** Splice reinforcing steel by welding only at locations shown on the plans.

1. **Base Metal.** Provide weldable reinforcing steel in conformance with Item 440, “Reinforcing Steel.”

2. **Preheat and Interpass Temperature.** Minimum preheat and interpass temperatures are shown in Table 5. When reinforcing steel is below the listed temperature for the size and carbon equivalency range of the bar being welded, preheat it so that the cross section of the bar is above the minimum temperature for at least 6 in. on each side of the joint. After welding is complete, allow bars to cool naturally to ambient temperature. Do not accelerate cooling.

Table 5
Minimum Preheat and Interpass Temperature for Reinforcing Steel

Carbon Equivalent Range (%)	Size of Reinforcing Bar (no.)	Temperature (°F)
Up to and including 0.40	Up to 11 inclusive	None
	14 and 18	50
0.41 through 0.45 inclusive	Up to 11 inclusive	None
	14 and 18	100
0.46 through 0.55 inclusive	Up to 6 inclusive	None
	7 to 11 inclusive	50
	14 and 18	200
Unknown	Up to 18 inclusive	500

For widening projects, base the preheat and interpass temperatures on the existing reinforcing steel and the requirements of Table 5.

3. **Joint Types.** Use butt splices for all No. 7 and larger bars. Use lap splices for No. 6 and smaller bars.

   Make groove welds in lap splices at least 4 in. long, and weld them on each side of the lap joint as shown in Figure 7. For No. 5 and smaller bars, weld from one side of the lap when it is impractical to weld from both sides of the joint if approved by the Engineer, but in this case make the weld at least 6 in. long.

   Where possible, make all butt splices in the flat position. Make all welds for butt splices, except horizontal welds on vertical bars, as shown in Figures 8 and 9. The back-up strip is required when access to the splice is from the top only. When bars can be rotated or access to the splice is available from two sides, the double bevel splice may be used, and this type weld requires gouging out the root pass similar to a flange splice on structural steel. The root pass may be made using E7010 or E8010 electrodes for all double beveled splices. If using E7010 or E8010 electrodes, preheat the steel to 400°F and then completely remove the root pass before welding the opposite side. Make horizontal splices on vertical bars as shown in Figure 10. Provide alignment strips as shown in Figures 9 and 10 to hold bars during welding operation. Trim alignment strips after welding is complete.

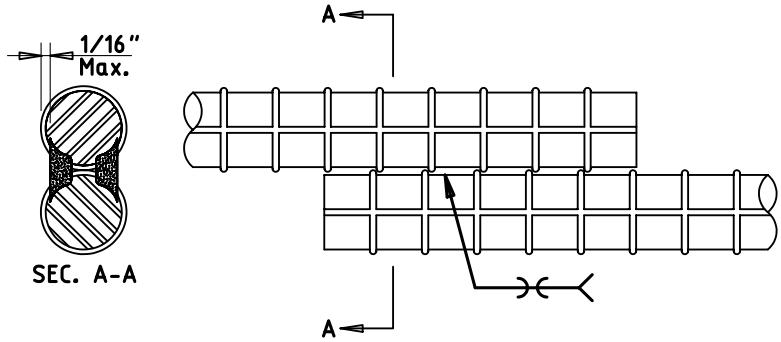

Figure 7
Direct lap joint with bars in contact.

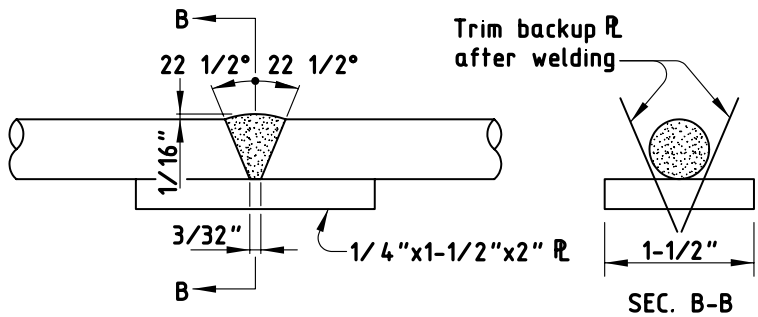

Figure 8
Single bevel V-groove weld in horizontal position.

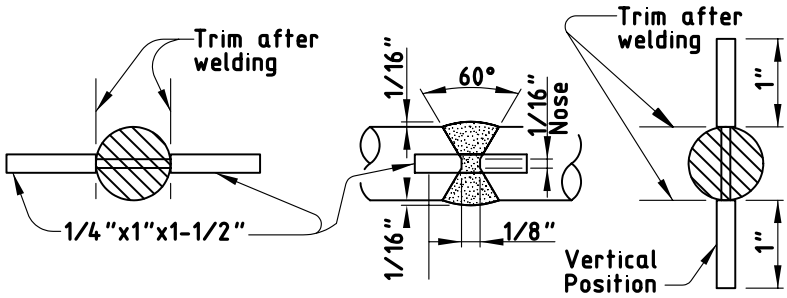

Figure 9
Double bevel V-groove weld in horizontal position.

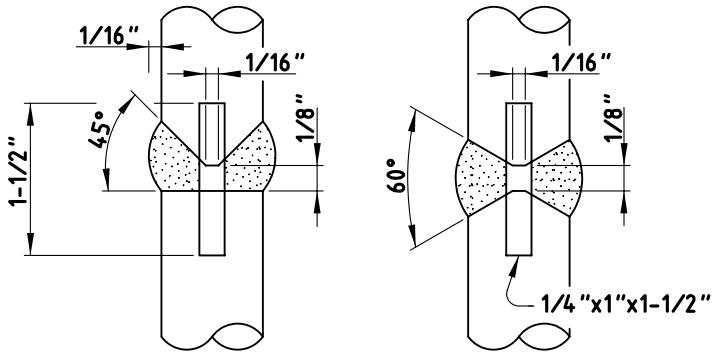

Figure 10
Double bevel V-groove weld in vertical position.

4. **Radiographic Inspection.** Radiograph welded butt splices at the expense of the Contractor when designated on the plans. Follow all applicable rules and regulations for radiographic operations. Ensure that welds have no cracks and that the sum of the greatest dimensions of porosity and fusion-type defects do not exceed 1/10 of the nominal bar diameter.

The Engineer examines and interprets the resulting radiographs, which become the property of the Department and remain with the Engineer.

448.5. Measurement and Payment. The work performed, materials furnished, equipment, labor, tools, and incidentals will not be measured or paid for directly but will be subsidiary to pertinent Items.

ITEM 449

ANCHOR BOLTS

449.1. Description. Fabricate and install anchor bolts to be embedded in or attached to concrete.

449.2. Materials.

A. Bolts and Nuts. Provide bolts and nuts that meet the standards given in Table 1.

Table 1
Bolt and Nut Standards

Specified Anchor Bolt Category	Bolt Standards	Nut Standards
Mild steel	ASTM A 307 Gr. A or A 36	ASTM A 563
Medium-strength, mild steel	ASTM F 1554 Gr. 55 with supplementary requirement S1	ASTM A 194 Gr. 2H or A 563 Gr. D or better
High-strength steel	ASTM A 325 or A 321	ASTM A 194 or A 563, heavy hex
Alloy steel	ASTM A 193 Gr. B7	ASTM A 194 Gr. 2H or A 563 Gr. DH, heavy hex

Provide a mill test report or manufacturer's certification indicating that the material conforms to these requirements. For alloy steel anchor bolts, provide a test report or certification attesting to the heat treating process. If no specific bolt category is indicated on the plans, provide mild steel anchor bolts with nuts that meet ASTM A 563.

B. Washers. Use washers that meet ASTM F 436.

C. Threads. Provide anchor bolts with rolled or cut threads of UNC or 8UN series in accordance with ASME B1.1. Anchor bolts larger than 2 in. in diameter must have UNC series threads. If bolts have rolled threads, ensure that the diameter of the unthreaded portion is neither less than the minimum pitch diameter nor more than the maximum major diameter of the threads. If bolts have cut threads, ensure that the diameter of the unthreaded portion is not less than the minimum major diameter of the threads. Ensure that all threads for bolts and nuts have Class 2 fit tolerances in accordance with ASME B1.1.

449.3. Construction.

A. Fabrication. Welded splicing of anchor bolts is not permitted.

Provide an anchorage device with each anchor bolt consisting of a standard bolt head, a threaded bolt with nut, or, if shown on the plans, a 90° bend. Make the inside-bend diameter approximately 2 times the anchor bolt diameter, but at no point along the bend greater than 3 times the bolt diameter. Hot bending is permissible provided the temperature does not exceed 1,100°F.

If the anchor bolts will be installed in a template embedded in concrete, tack-weld the anchorage nuts to the template in the shop. Perform this welding with appropriate jigs to ensure that the anchor bolt is perpendicular to the template.

When embedded templates are not specified and nuts are welded to the end of anchor bolts for anchorage, weld only on the nut face at the unstressed end of the bolt. Ensure that no welding, arc, or other potential notch-producing effects occur in the stressed portion of the bolt.

Shipping of the anchor bolt cage in its assembled condition is not required.

B. Finish. Galvanize in accordance with Item 445, "Galvanizing."

1. **Anchor Bolts Embedded in Concrete.** Galvanize the exposed end plus a minimum of 6 in., unless otherwise shown on the plans.
2. **Anchor Bolts Extending Through Concrete.** Galvanize the complete length of the bolt.
3. **Nuts.** Galvanize exposed nuts. Galvanize the untapped blanks before cutting the threads.

4. **Washers.** Galvanize exposed washers.

C. **Installation.** Hold the anchor bolt and template assembly rigidly in position during concrete placement. Use wood templates or other positive means to ensure correct positioning of anchor bolts not requiring steel templates. Positioning devices may be tack-welded to the steel templates but not to any portion of the anchor bolts.

1. **Anchor Bolt Thread Lubricant Coating.** For traffic signal poles, roadway illumination poles, high mast illumination poles, and overhead sign support structures, coat anchor bolt threads before installing nuts with an electrically conducting lubricant compound described in Section 449.3.C.2.a, "Definitions." Coat anchor bolt threads for other structures with pipe joint compound or beeswax. After installing nuts, repair galvanizing damage on bolts, nuts, and washers in accordance with Section 445.3.D, "Repairs."

2. **Anchor Bolt Tightening Procedure.** Tighten anchor bolts for traffic signal poles, roadway illumination poles with shoe bases, high mast illumination poles, and overhead sign support structures in accordance with this Section. This procedure covers the tightening of nuts on a double-nut anchor bolt system using anchor bolts with 55-ksi or 105-ksi minimum yield strength and UNC or 8UN thread series to secure structures to drilled shaft foundations.

a. **Definitions.** The following definitions apply to the anchor bolt tightening procedure:

- **Double-nut anchor bolt system.** An anchor bolt with 2 nuts that sandwich the structure's base plate. The bottom nut is positioned under the base plate to level, support, and provide the reaction for the force applied by tightening the top nut positioned above the base plate.
- **Electrically conducting lubricant.** A compound commonly used in the electrical industry to coat threads of field-cut rigid metal conduit and suitable for exposure to weather.
- **Impact tightening.** The tightening of nuts with a box end "slug" or "knocker" wrench and a sledgehammer. The wrench, matching the size of the nut to be tightened, is driven with the sledgehammer to rotate the nut.
- **Static tightening.** The tightening of nuts with a "spud" wrench and a pipe or extension handle. The wrench, matching the size of the nut to be tightened, may be turned with more than one worker to rotate the nut.
- **Snug-tight.** The condition when the nut is in full contact with the base plate. It may be assumed that the full effort of a worker on a 12-in. wrench results in a snug-tight condition.
- **Turn-of-the-nut method.** The tightening of top nuts to snug-tight condition then establishing reference positions by marking one flat on each nut with a corresponding reference mark on the base plate at each bolt. Each nut is then turned to the prescribed rotation from the referenced snug tight position.

b. **Anchor Bolt Tightening.** Perform the following procedure:

(1) Coat the threads of the anchor bolts with electrically conducting lubricant.

(2) Install the bottom nuts on the bolts, 1 on each bolt.

(3) Using the top template as a guide, level the top template by adjusting the bottom nuts so that the template rests on each nut and the distance between the top of the concrete shaft and the bottom surface of the bottom nut is approximately 1/2 in.

(4) Remove the template.

(5) Coat the bearing surfaces of the bottom nuts and washers with electrically conducting lubricant.

(6) Install bottom washers on bolts, 1 on each bolt.

(7) Erect and plumb the structure as specified. Adjust the bottom nuts so that each is bearing equally on the washer or base plate. The truss for cantilever overhead sign support structures and the mast arm for traffic signal poles must be removed during anchor bolt tightening.

(8) With the plumbed structure supported by a crane, coat the bearing surfaces of the top nuts and washers with electrically conducting lubricant. Install 1 washer and 1 top nut on each bolt. Turn the top nuts onto the bolts so that each is hand-tight against the washer or base plate.

(9) Using a wrench, turn each bottom nut to a snug-tight condition.

(10) Verify that the structure is still plumb and still supported by the crane. Begin turn-of-the-nut method by turning each top nut down to the same snug tight condition. Prevent rotation of the bottom leveling nut during all top nut tightening. Once snug-tight condition is achieved, establish reference marks for turn-of-the-nut method and then tighten the top nuts by turning each nut 1/12 turn (1/2 of a nut flat) past snug-tight using either static or impact tightening. Turn each top nut an additional 1/12 turn until each nut has been tightened 1/6 total turn past snug-tight.

449.4. Measurement and Payment. Top or bottom templates, washers, lock washers, nuts, lock nuts, and other devices used for installing anchor bolts are considered part of the anchor bolt assembly. All work performed, materials furnished, equipment, labor, tools, and incidentals will not be measured or paid for directly but will be subsidiary to pertinent Items.

ITEM 460

CORRUGATED METAL PIPE

460.1. Description. Furnish and install corrugated metal pipes, materials for constructing corrugated metal pipe culverts, or corrugated metal storm drain mains, laterals, stubs, and inlet leads.

460.2. Materials.

A. Fabrication. Furnish corrugated metal pipe in accordance with Table 1.

Table 1
Specifications for Corrugated Metal Pipe

Pipe Type	AASHTO Specification
Galvanized steel and aluminized steel	M 36
Pre-coated galvanized steel	M 245
Aluminum	M 196

The pipe type and corresponding AASHTO designations are shown in Table 2.

Table 2
Corrugated Metal Pipe Types

Pipe Type	AASHTO Classification
Circular	Type I
Circular, smooth-lined	Type IA
Circular, spiral rib	Type IR
Arch	Type II
Arch, smooth-lined	Type IIA
Arch, spiral rib	Type IIR

Provide corrugated metal pipe of all types with annular corrugations, helical corrugations, or spiral ribs (corrugations) projecting outward. Provide pipe with helical end corrugations only when necessary to join new pipe to existing pipe with helical end corrugations.

For pre-coated galvanized steel pipe, provide a minimum polymer coating thickness of 10 mils on each side. Galvanized metal sheets and coils used for galvanized corrugated metal pipe may be sampled and tested in accordance with Tex-708-I.

Repair damaged galvanized coating in accordance with Item 445.3.D, “Repairs.” Repair damaged aluminized or polymer coating in accordance with AASHTO M 36 and M 245 respectively.

B. Protective Coating. When required, furnish bituminous coating that meets AASHTO M 190 and that tightly adheres to the metal, does not chip off in handling, and protects the pipe from deterioration as evidenced by samples prepared from the coating material successfully meeting the Shock Test and Flow Test in accordance with Tex-522-C.

Uniformly coat the pipe inside and out to a minimum thickness of 0.05 in. measured on the crests of the corrugations. When smooth lining is specified, coat the pipe with additional material applied to the full inner circumference to form a smooth inside lining with a minimum thickness of 1/8 in. above the crest of the corrugations.

C. Design. For full-circle pipe, the diameter, permissible corrugations, and required gauges will be shown. For pipe arch, the design size and permissible corrugations will be shown. For smooth lined pipe, the required gauges of the shell and the liner will also be shown. For steel pipe arch, furnish the shape and minimum gauge in accordance with Tables 3, 4, 5, or 6 for the specified design size and corrugation. For aluminum pipe arch, use Table 7 or 8. Where reference is made to gauge of metal, the reference is to U.S. Standard Gauge for uncoated sheets.

Measure dimensions from the inside crests of the corrugations. A tolerance of ±1 in. or 2% of the equivalent circular diameter, whichever is greater, is allowed for span and rise.

Table 3
Steel Pipe Arch
2-2/3 by 1/2-in. Corrugations

Design Size	Span (in.)	Rise (in.)	Min. Cover (in.)	Min. Gauge Required	Coated Thickness (in.)	Equivalent Diameter Full-Circle Pipe (in.)
1	17	13	12	16	0.064	15
2	21	15	12	16	0.064	18
2A	23	19	12	16	0.064	21
3	28	20	12	16	0.064	24
4	35	24	12	16	0.064	30
5	42	29	12	14	0.079	36
6	49	33	12	14	0.079	42
7	57	38	12	12	0.109	48
8	64	43	12	12	0.109	54
9	71	47	12	10	0.138	60

Table 4
Steel Pipe Arch
3 by 1-in. Corrugations

Design Size	Span (in.)	Rise (in.)	Min. Cover (in.)	Min. Gauge Required	Coated Thickness (in.)	Equivalent Diameter Full-Circle Pipe (in.)
7	53	41	12	14	0.079	48
8	60	46	12	14	0.079	54
9	66	51	12	14	0.079	60
10	73	55	12	14	0.079	66
11	81	59	12	14	0.079	72
12	87	63	12	14	0.079	78
13	95	67	12	12	0.109	84
14	103	71	18	12	0.109	90
15	112	75	18	12	0.109	96
16	117	79	18	12	0.109	102
17	128	83	24	10	0.138	108
18	137	87	24	10	0.138	114
19	142	91	24	10	0.138	120

Table 5
Steel Pipe Arch
5 by 1-in. Corrugations

Design Size	Span (in.)	Rise (in.)	Min. Cover (in.)	Min. Gauge Required	Coated Thickness (in.)	Equivalent Diameter Full-Circle Pipe (in.)
11	81	59	12	12	0.109	72
12	87	63	12	12	0.109	78
13	95	67	12	12	0.109	84
14	103	71	18	12	0.109	90
15	112	75	18	12	0.109	96
16	117	79	18	12	0.109	102
17	128	83	24	10	0.138	108
18	137	87	24	10	0.138	114
19	142	91	24	10	0.138	120

Table 6
Steel Pipe Arch, Spiral Rib
7-1/2 by 3/4 by 3/4-in. Corrugations

Design Size	Span (in.)	Rise (in.)	Min. Cover (in.)	Min. Gauge Required	Coated Thickness (in.)	Equivalent Diameter Full-Circle Pipe (in.)
2	20	16	12	16	0.064	18
2A	23	19	12	16	0.064	21
3	27	21	12	16	0.064	24
4	33	26	12	16	0.064	30
5	40	31	12	14	0.064	36
6	46	36	12	12	0.064	42
7	53	41	12	12	0.079	48
8	60	46	12	12	0.079	54
9	66	51	15	12	0.079	60

Table 7
Aluminum Pipe Arch
2-2/3-in. by 1/2-in. Corrugations

Design Size	Span (in.)	Rise (in.)	Min. Cover (in.)	Min. Gauge Required	Coated Thickness (in.)	Equivalent Diameter Full-Circle Pipe (in.)
1	17	13	12	16	0.060	15
2	21	15	12	16	0.060	18
2A	23	19	12	16	0.060	21
3	28	20	12	14	0.075	24
4	35	24	12	14	0.075	30
5	42	29	18	12	0.105	36
6	49	33	18	12	0.105	42
7	57	38	18	10	0.135	48
8	64	43	18	10	0.135	54
9	71	47	18	8	0.164	60

Table 8
Aluminum Pipe Arch, Spiral Rib
7-1/2 by 3/4 by 3/4-in. Corrugations

Design Size	Span (in.)	Rise (in.)	Min. Cover (in.)	Min. Gauge Required	Coated Thickness (in.)	Equivalent Diameter Full-Circle Pipe (in.)
2	20	16	12	16	0.064	18
2A	23	19	12	16	0.064	21
3	27	21	15	16	0.064	24
4	33	26	18	16	0.064	30
5	40	31	18	14	0.075	36
6	46	36	18	12	0.105	42
7	53	41	21	12	0.105	48
8	60	46	18	10	0.135	54
9	66	51	21	10	0.135	60

D. Coupling Bands. Furnish coupling bands and other hardware for galvanized or aluminized steel pipe in accordance with AASHTO M 36 for steel pipe and AASHTO M 196 for aluminum pipe. Do not use coupling bands that are more than 3 nominal sheet thicknesses lighter than the thickness of the pipe to be connected or that are lighter than 0.052 in. for steel or 0.048 in. for aluminum. Provide coupling bands made of the same base metal and coating as the pipe.

460.3. Construction.

A. Designation of Type. The types of pipes will be indicated on the plans by the following descriptions:

- Pipe type: Corrugated metal pipe (CMP), corrugated metal pipe arch (CMP ARCH), spiral rib corrugated metal pipe (SRCMP), or spiral rib corrugated metal pipe arch (SRCMP ARCH);
- Type of material: Galvanized steel, aluminum-coated (Type 2), or aluminum;
- Pipe coating: Bituminous coated or polymer coated;
- Special requirements: Paved invert or smooth lining; and
- Pipe size: Diameter or design number.

When pipe is designated as “Corrugated Metal Pipe” without a type of material or pipe coating designation, furnish any of the material types specified above.

B. Excavation, Shaping, Bedding, and Backfill. Excavate, shape, bed, and backfill in accordance with Item 400, “Excavation and Backfill for Structures,” except where jacking, boring, or tunneling

methods are shown on the plans or are permitted. Jack, bore, or tunnel in accordance with Item 476, "Jacking, Boring, or Tunneling Pipe or Box."

Provide uniform backfill material and uniformly compacted density throughout the length of the structure so that equal pressure is provided. Unless otherwise shown on the plans or permitted in writing, no heavy earth-moving equipment is allowed over the structure until a minimum of 4 ft. of compacted fill (permanent or temporary) has been placed over the top of the structure. Before adding each new layer of loose backfill material, inspect the inside periphery of the structure for local or unequal deformation caused by improper construction methods. Continue inspections until a minimum of 24 in. of cover is obtained. Evidence of such deformation will be reason for corrective measures as directed. Remove and replace pipe damaged by the Contractor at no additional cost to the Department.

C. Laying Pipe. Unless otherwise authorized, lay pipes on the bedding from the outlet end and join the separate sections firmly together with outside laps of annular joints pointing upstream and longitudinal laps on the sides. If any metal in joints is not protected by galvanizing or aluminizing, coat it with a suitable asphalt paint. Lower sections of pipe into the trench without damaging the pipe or disturbing the bedding and the sides of the trench. Remove and re-lay, without extra compensation, pipe that is not in alignment or that shows excessive settlement after laying.

Lay multiple installations of corrugated metal pipe and pipe arches with the centerlines of individual barrels parallel. Unless otherwise indicated on the plans, maintain the clear distances between outer surfaces of adjacent pipes given in Table 9.

Table 9
Required Pipe Clear Distances

Diameter Full-Circle Pipe (in.)	Pipe Arch Design Size	Clear Distance Between Pipes. (Full-Circle Pipe and Pipe Arch)
18	2	1 ft. 2 in.
21	2A	1 ft 3 in
24	3	1 ft. 5 in.
30	4	1 ft. 8 in.
36	5	1 ft. 11 in.
42	6	2 ft. 2 in.
48	7	2 ft. 5 in.
54	8	2 ft. 10 in.
60 to 84	9	3 ft. 2 in.
90 to 120	10 and over	3 ft. 5 in.

D. Jointing. Provide field joints that maintain pipe alignment during construction and prevent infiltration of side material during the life of the installation. Unless otherwise shown on the plans, provide one of the following jointing systems:

1. **Coupling Bands.** Use coupling bands with annular corrugations only with pipe with annular corrugations or with helical pipe or spiral rib pipe in which the ends have been rerolled to form annular corrugations. Provide bands with corrugations that have the same dimensions as the corrugations in the pipe end or that are designed to engage the first or second corrugation from the end of each pipe. The band may also include a U-shaped channel to accommodate upturned flanges on the pipe.

   When helical end corrugations are allowed, field-join pipe with helically corrugated bands or bands with projections (dimples).

   Coupling bands with projections may be used with pipe that has annular or helical end corrugations or spiral ribs. Provide bands formed with the projections in annular rows with 1 projection for each corrugation of helical pipe or spiral rib pipe. Provide 2 annular rows for bands 10-1/2 in. or 12 in. wide and 4 annular rows of projections for bands 16-1/2 in. or 22 in. wide.

   Use a coupling band width that conforms to Table 10. Connect the bands using suitable galvanized devices in accordance with AASHTO M 36. Lap coupling bands equally on each of the pipes to

form a tightly closed joint after installation. For corrugations not shown in Table 10, provide at least the minimum coupling band width recommended by the manufacturer.

Table 10
Coupling Band Width Requirements

Nominal Corrugation Size[1] (in.)	Nominal Pipe Inside Diameter[2] (in.)	Minimum Coupling Band Width (in.)		
		Annular Corrugated Bands	Helically Corrugated Bands	Bands with Projections
2-2/3 by 1/2	12 to 36	7	12	10-1/2
	42 to 72	10-1/2	12	10-1/2
	78 to 84[3]	10-1/2	12	16-1/4
3 by 1	36 to 72	12	14	10-1/2
	78 to 120	12	14	16-1/4
5 by 1	36 to 72	20	22	12
	78 to 120	20	22	22
7-1/2 by 3/4	18 to 60	10-1/2	12	10-1/2
by 3/4	66 to 102	10-1/2	12	16-1/4

1. For helically corrugated pipe or spiral rib pipe with rerolled ends, the nominal size refers to the dimensions of the end corrugations in the pipe.
2. Equivalent circular diameter for Type II pipe.
3. Diameter through 120 in. for annular corrugated bands used on rerolled ends of helically corrugated pipe or spiral rib pipe.

The minimum diameter of bolts for coupling bands is 3/8 in. for pipe diameters 18 in. and less and 1/2 in. for pipe diameters 21 in. and greater. For bands 12 in. wide or less, provide at least 2 bolts. For bands wider than 12 in., provide at least 3 bolts.

Provide galvanized hardware in accordance with Item 445, “Galvanizing.”

2. **Bell and Spigot.** Attach the bell to one end of the corrugated metal pipe at the manufacturing plant before shipment. Provide a bell with a minimum 6-in. stab depth. Install the gasket on the spigot end and apply lubricant in accordance with the manufacturer’s recommendations. Provide gaskets that meet ASTM F 477 with Type A Shore durometer hardness of 45 ±5. Do not use thermoplastic elastomer as the basic polymer. During laying of the pipe, push the spigot end of the pipe into the bell end of the previously laid pipe.

3. **Pipe Connections and Stub Ends.** Make connections of pipe to existing pipe or appurtenances as shown on the plans or as directed. Mortar or concrete the bottom of the existing structure, if necessary, to eliminate any drainage pockets created by the new connection.

   Insulate portions of aluminum pipe that are to be in contact with metal other than aluminum by a coating of bituminous material meeting the requirements of Section 460.2.B, “Protective Coating.” Extend the coating a minimum of 1 ft. beyond the area of contact.

   When connecting pipe into existing structures that will remain in service, restore any damage that results from making the connection. Seal stub ends for connections to future work not shown on the plans by installing watertight plugs into the free end of the pipe.

460.4. Measurement. This Item will be measured by the foot. Pipe will be measured between the ends of the barrel along the flow line, not including safety end treatments. Safety end treatments will be measured in accordance with Item 467, “Safety End Treatment.” Pipe that is required to be jacked, bored, or tunneled will be measured in accordance with Item 476, “Jacking, Boring, or Tunneling Pipe or Box.” Where spurs, branches, or connections to existing pipe lines are involved, measurement of the spur or new connecting pipe will be made from the intersection of the flow line with the outside surface of the pipe into which it connects. Where inlets, headwalls, catch basins, manholes, junction chambers, or other structures are included in lines of pipe, the length of pipe tying into the structure wall will be included for measurement but no other portion of the structure length or width will be included.

For multiple pipes, the measured length will be the sum of the lengths of the barrels.

This is a plans quantity measurement Item. The quantity to be paid is the quantity shown in the proposal, unless modified by Article 9.2, “Plans Quantity Measurement.” Additional measurements or calculations will be made if adjustments of quantities are required.

460.5. Payment. The work performed and materials furnished in accordance with this Item and measured as provided under “Measurement” will be paid for at the unit price bid for “Corrugated Metal Pipe,” “Corrugated Metal Pipe Arch,” “Spiral Rib Corrugated Metal Pipe,” or “Spiral Rib Corrugated Metal Pipe Arch” of the type, size, and coating specified. This price is full compensation for furnishing, hauling, placing, and joining of pipes; jointing materials; all connections to new or existing structures; breaking back, removing, and disposing of portions of the existing structure; replacing portions of the existing structure; cutting pipe ends on skew or slope; and equipment, labor, tools, and incidentals.

Protection methods for excavations greater than 5 ft. deep will be measured and paid for as required under Item 402, “Trench Excavation Protection,” or Item 403, “Temporary Special Shoring.” Excavation, shaping, bedding, and backfill will be paid for in accordance with Item 400, “Excavation and Backfill for Structures.” When jacking, boring, or tunneling is used at the Contractor’s option, payment will be made under this Item. When jacking, boring, or tunneling is required, payment will be made under Item 476, “Jacking, Boring, or Tunneling Pipe or Box.”

ITEM 462

CONCRETE BOX CULVERTS AND STORM DRAINS

462.1. Description. Furnish, construct, and install concrete box culverts and storm drains.

462.2. Materials.

A. General. Furnish materials in accordance with the following:

- Item 420, "Concrete Structures"
- Item 421, "Hydraulic Cement Concrete"
- Item 440, "Reinforcing Steel"
- Item 464, "Reinforced Concrete Pipe."

Provide cast-in-place or precast, formed or machine-made, box culverts and storm drains. For culverts with overlay or a 1- to 2-course surface treatment or if the top slab is the final riding surface, use Class S concrete for top slabs of cast-in-place concrete culverts unless otherwise shown on the plans. Use Class C concrete for the rest of the culvert and for all other cast-in-place boxes. Culverts with fill do not require Class S concrete.

Furnish concrete for machine-made precast boxes in accordance with ASTM C 1433.

When sulfate-resistant concrete is required, do not use Class C fly ash.

B. Fabrication.

1. **Cast-in-Place.** Meet Item 420, "Concrete Structures."
2. **Formed Precast.** Meet Item 424, "Precast Concrete Structures (Fabrication)."
3. **Machine-Made Precast.** Furnish machine-made precast boxes in accordance with ASTM C 1433. Ensure that concrete is placed uniformly in the forms. Compact by mechanical devices to ensure dense concrete. Mix concrete in a central batch plant or other approved batching facility from which the quality and uniformity of the concrete can be ensured. Do not use transit-mixed concrete.

C. Testing.

1. **Cast-in-Place.** Provide test specimens that meet Item 421, "Hydraulic Cement Concrete."
2. **Formed Precast.** Produce test specimens in accordance with Tex-704-I.
3. **Machine-Made Precast.** Make test specimens in test cylinders at the same time and in the same manner as the box sections they represent. Make a minimum of 4 test cylinders for each day's production run and each mix design. Cure test cylinders in the same manner and for the same times as the boxes they represent. Test the specimens in accordance with Tex-704-I.
4. **Testing Equipment.** The producer must furnish all equipment required for testing concrete for boxes produced in a precasting plant.

D. Lifting Holes. For precast boxes, provide no more than 4 lifting holes in each section. Lifting holes may be cast, cut into fresh concrete after form removal, or drilled.

Provide lifting holes of sufficient size for adequate lifting devices based on the size and weight of the box section. Do not use lifting holes larger than 3 in. in diameter. Do not cut more than 1 longitudinal wire or 2 circumferential wires per layer of reinforcing steel when locating lift holes. Repair spalled areas around lifting holes.

E. Marking. Mark precast boxes with the following:

- name or trademark of the producer;
- date of manufacture;
- box size;
- minimum and maximum fill heights; and
- match marks for proper installation, when required, under Section 462.2.F, "Tolerances."

For boxes without lifting holes, mark 1 end of each box section on the inside and outside walls to indicate the top or bottom as it will be installed.

Indent markings into the box section or paint them on each box with waterproof paint.

F. Tolerances. Ensure that precast sections of either type meet the following requirements:

- The inside vertical and horizontal dimensions do not vary from plan requirements by more than 1/2 in. or 1%, whichever is greater.
- The horizontal or vertical plane at each end of the box section does not vary from perpendicular by more than 1/2 in. or 1%, whichever is greater, measured on the inside faces of the section.
- The sides of a section at each end do not vary from being perpendicular to the top and bottom by more than 1/2 in. or 1%, whichever is greater, when measured diagonally between opposite interior corners.

Ensure that wall and slab thicknesses are not less than shown on the plans except for occasional deficiencies not greater than 1/4 in. or 5%, whichever is greater. If proper jointing is not affected, thicknesses in excess of plan requirements are acceptable.

Deviations from the above tolerances will be acceptable if the sections can be fitted at the plant or job site and the joint opening at any point does not exceed 1 in. Use match marks for proper installation on sections that have been accepted in this manner.

G. Defects and Repair. Fine cracks on the surface of the member that do not extend to the plane of the nearest reinforcement are acceptable unless the cracks are numerous and extensive. Repair cracks that extend into the plane of the reinforcing steel in an approved manner. Excessive damage, honeycomb, or cracking will be subject to structural review. The Engineer may accept boxes with repairs that are sound, properly finished, and cured in conformance with pertinent specifications. When fine cracks on the surface indicate poor curing practices, discontinue further production of precast sections until corrections are made and proper curing is provided.

H. Storage and Shipment. Store precast sections on a level surface. Do not place any load on the sections until design strength is reached and curing is complete. Shipment of sections is permissible when the design strength and curing requirements have been met.

462.3. Construction.

A. **Excavation, Shaping, Bedding, and Backfill.** Excavate, shape, bed, and backfill in accordance with Item 400, "Excavation and Backfill for Structures," except where jacking, boring, or tunneling methods are shown on the plans or are permitted. Jack, bore, or tunnel in accordance with Item 476, "Jacking, Boring, or Tunneling Pipe or Box." For all box structures where joints consist of materials other than mortar, immediate backfilling is permitted. Take precautions in placing and compacting the backfill to avoid any movement of the boxes or damage to the joints. Remove and replace boxes damaged by the Contractor at no expense to the Department.

B. **Placement of Boxes.** When precast boxes are used to form multiple barrel structures, place the box sections in conformance with the plans or as directed. Place material to be used between barrels as shown on the plans or as directed. Unless otherwise authorized, start the laying of boxes on the bedding at the outlet end and proceed toward the inlet end with the abutting sections properly matched. Fit, match, and lay the boxes to form a smooth, uniform conduit true to the established lines and grades. For trench installations, lower the box sections into the trench without damaging the box or disturbing the bedding and the sides of the trench. Carefully clean the ends of the box before it is placed. Prevent the earth or bedding material from entering the box as it is laid. Remove and re-lay, without extra compensation, boxes that are not in alignment or that show excessive settlement after laying. Form and place cast-in-place boxes in accordance with Item 420, "Concrete Structures."

C. **Jointing.** Unless otherwise shown on the plans, use any of the jointing materials in accordance with the jointing requirements specified in Item 464, "Reinforced Concrete Pipe."

D. **Connections and Stub Ends.** Make connections of boxes to existing boxes, pipes, storm drains, or storm drain appurtenances as shown on the plans. Mortar or concrete the bottom of existing structures if necessary to eliminate any drainage pockets created by the connections. Connect boxes to any required headwalls, wingwalls, safety end treatments or riprap, or other structures as shown on the plans or as directed. Repair any damage to the existing structure resulting from making the connections. Finish stub ends for connections to future work not shown on the plans by installing watertight plugs into the free end of the box.

   For precast boxes, fill lifting holes with mortar or concrete and cure. Precast concrete or mortar plugs may be used.

462.4. Measurement. This Item will be measured by the foot. Measurement will be made between the ends of the culvert or storm drain along the flow line, not including safety end treatments. Safety end treatments will be measured in accordance with Item 467, "Safety End Treatment." Measurement of spurs, branches, or new connection box section will be made from the intersection of the flow line with the outside surface of the structure into which it connects. Where inlets, headwalls, wingwalls, catch basins, manholes, junction chambers, or other structures are included in lines of culverts or storm drains, the length of box section tying into the structure wall will be included for measurement, but no other portion of the structure length or width will be included.

The measured length of multiple barrel structures will be the sum of the lengths of the barrels.

This is a plans quantity measurement Item. The quantity to be paid is the quantity shown in the proposal unless modified by Article 9.2, “Plans Quantity Measurement.” Additional measurements or calculations will be made if adjustments of quantities are required.

462.5. Payment. The work performed and materials furnished in accordance with this Item and measured as provided under “Measurement” will be paid for at the unit price bid for “Concrete Box Culvert” of the size specified. This price is full compensation for constructing, furnishing, and transporting sections; preparation and shaping of the bed; backfill material between box sections; jointing of sections; jointing material; cutting of sections on skew or slope; connections to new or existing structures; breaking back, removing and disposing of portions of the existing structure and replacing portions of the existing structure as required to make connections; concrete and reinforcing steel; and equipment, labor, materials, tools, and incidentals.

Protection methods for excavations greater than 5 ft. deep will be measured and paid for as required under Item 402, “Trench Excavation Protection,” or Item 403, “Temporary Special Shoring.” Excavation, shaping, bedding, and backfill will be paid for in accordance with Item 400, “Excavation and Backfill for Structures.” When jacking, boring, or tunneling is used at the Contractor’s option, payment will be made under this Item. When jacking, boring, or tunneling is required, payment will be made under Item 476, “Jacking, Boring, or Tunneling Pipe or Box.”

ITEM 464

REINFORCED CONCRETE PIPE

464.1. Description. Furnish and install reinforced concrete pipe, materials for precast concrete pipe culverts, or precast concrete storm drain mains, laterals, stubs, and inlet leads.

464.2. Materials.

A. Fabrication. Provide precast reinforced concrete pipe that conforms to the design shown on the plans and to the following:

- ASTM C 76 or ASTM C 655 unless otherwise shown on the plans for circular pipe, or
- ASTM C 506 for arch pipe, or
- ASTM C 507 for horizontal elliptical pipe.

Provide precast concrete pipe that is machine-made or cast by a process that will provide for uniform placement of the concrete in the form and compaction by mechanical devices that will assure a dense concrete. Mix concrete in a central batch plant or other approved batching facility where the quality and uniformity of the concrete is assured. Do not use transit-mixed concrete for precast concrete pipe. When sulfate-resistant concrete is required, do not use Class C fly ash.

Do not place more than 2 holes for lifting and placing in the top section of precast pipe. Cast, cut, or drill the lifting holes in the wall of the pipe. The maximum hole diameter is 3 in. at the inside surface of the pipe wall and 4 in. at the outside surface. Do not cut more than 1 longitudinal wire or 2 circumferential wires per layer of reinforcing steel when locating lift holes.

B. Design.

1. **General.** The class and D-load equivalents are shown in Table 1. Furnish arch pipe in accordance with ASTM C 506 and the dimensions shown in Table 2. Furnish horizontal elliptical pipe in accordance with ASTM C 507 and the dimensions shown in Table 3. For arch pipe and horizontal elliptical pipe the minimum height of cover required is 1 ft.

Table 1
Circular Pipe
ASTM C 76 & ASTM C 655

Class	D-Load
I	800
II	1,000
III	1,350
IV	2,000
V	3,000

Table 2
Arch Pipe

Design Size	Equivalent Diameter (in.)	Rise (in.)	Span (in.)
1	18	13-1/2	22
2	21	15-1/2	26
3	24	18	28-1/2
4	60	22-1/2	36-1/4
5	36	26-5/8	43-3/4
6	42	31-5/16	51-1/8
7	48	36	58-1/2
8	54	40	65
9	60	45	73
10	72	54	88

Table 3
Horizontal Elliptical Pipe

Design Size	Equivalent Diameter (in.)	Rise (in.)	Span (in.)
1	18	14	23
2	24	19	30
3	27	22	34
4	30	24	38
5	33	27	42
6	36	29	45
7	39	32	49
8	42	34	53
9	48	38	60
10	54	43	68

2. **Jacking, Boring, or Tunneling.** Design pipe for jacking, boring, or tunneling considering the specific installation conditions such as the soil conditions, installation methods, anticipated deflection angles, and jacking stresses. When requested, provide design notes and drawings signed and sealed by a Texas licensed professional engineer.

C. Physical Test Requirements. Acceptance of the pipe will be determined by the results of the following tests:

- material tests required in ASTM C 76, C 655, C 506, or C 507,
- absorption tests in accordance with ASTM C 497,
- three-edge bearing tests in accordance with ASTM C 497 (Perform 3-edge bearing tests on 1 pipe for each 300 pipes or fraction thereof for each design or shape, size, class, or D-load produced within 30 calendar days. Test for the load to produce a 0.01-in. crack or 15% in excess of the required D-load, whichever is less. Test the pipe to ultimate load if so directed. Tested pipe that satisfies the requirements of Section 464.2.F., “Causes for Rejection,” may be used for construction. As an alternate to the 3-edge bearing test, concrete pipe 54 in. in diameter and larger may be accepted on the basis of compressive strength of cores cut from the wall of the pipe. The

manufacturer must determine the compressive strength of the samples. Obtain, cure, prepare, and test the cores in accordance with ASTM C 497. The manufacturer must plug and seal core holes in the pipe wall after testing.), and

- inspection of the finished pipe to determine its conformance with the required design and its freedom from defects.

D. Marking. Clearly mark the following information on each section of pipe:

- class or D-load of pipe,
- ASTM designation,
- date of manufacture,
- name or trademark of the manufacturer, and
- pipe to be used for jacking and boring.

For pipe with elliptical reinforcement, clearly mark 1 end of each section during the process of manufacture or immediately thereafter. Mark the pipe on the inside and the outside of opposite walls to show the location of the top or bottom of the pipe as it should be installed unless the external shape of the pipe is such that the correct position of the top and bottom is obvious. Mark the pipe section by indenting or painting with waterproof paint.

E. Inspection. Provide facilities and access to allow for inspection regarding the quality of materials, the process of manufacture, and the finished pipe at the pipe manufacturing plant. In addition, provide access for inspection of the finished pipe at the project site before and during installation.

F. Causes for Rejection. Individual sections of pipe may be rejected for any of the following:

- fractures or cracks passing through the shell, with the exception of a single end crack that does not exceed the depth of the joint;
- defects that indicate imperfect proportioning, mixing, and molding;
- surface defects indicating honeycombed or open texture;
- damaged ends where such damage would prevent making a satisfactory joint;
- any continuous crack having a surface width of 0.01 in. or more and extending for a length of 12 in. or more.

G. Repairs. Make repairs if necessary because of occasional imperfections in manufacture or accidental damage during handling. The Engineer may accept pipe with repairs that are sound, properly finished, and cured in conformance with pertinent specifications.

H. Rejections. Allow access for the marking of rejected pipe. Rejected pipe will be plainly marked by the Engineer by painting colored spots over the Department monogram on the inside wall of the pipe and on the top outside wall of the pipe. The painted spots will be no larger than 4 in. in diameter. The rejected pipe will not be defaced in any other manner. Remove the rejected pipe from the project and replace with pipe meeting the requirements of this Item.

I. Jointing Materials. Use any of the materials described herein for the making of joints, unless otherwise shown on the plans. Furnish a manufacturer's certificate of compliance for all jointing materials except mortar.

1. **Mortar.** Provide mortar for joints that meets the requirements of Section 464.3.C, "Jointing."
2. **Cold-Applied, Plastic Asphalt Sewer Joint Compound.** Provide a material that consists of natural or processed asphalt base, suitable volatile solvents, and inert filler. The consistency is to be such that the ends of the pipe can be coated with a layer of the compound up to 1/2 in. thick by means of a trowel. Provide a joint compound that cures to a firm, stiff plastic condition after application. Provide a material of a uniform mixture. If any small separation occurs in the container, stir to a uniform mix before using.

   Provide a material that meets the requirements of Table 4 when tested in accordance with Tex-526-C.

Table 4
Cold-Applied, Plastic Asphalt Sewer Joint Compound
Material Requirements

Composition	Analysis
Asphalt base, 100%–% volatiles–% ash, % by weight	28–45
Volatiles, 212°F evaporation, 24 hr., % by weight	10–26
Mineral matter, determined as ash, % by weight	30–55
Consistency, cone penetration, 150 q, 5 sec., 77°F	150–275

3. **Rubber Gaskets.** Provide gaskets that conform to ASTM C 361 or C 443. Meet the requirements of ASTM C 443 for design of the joints and permissible variations in dimensions.

4. **Pre-Formed Flexible Joint Sealants.** Pre-formed flexible joint sealants may be used for sealing joints of tongue-and-groove concrete pipe. Provide flexible joint sealants that meet the requirements of ASTM C 990. Use flexible joint sealants that do not depend on oxidizing, evaporating, or chemical action for its adhesive or cohesive strength. Supply in extruded rope form of suitable cross section. Provide a size of the pre-formed flexible joint sealant in accordance with the manufacturer's recommendations and large enough to properly seal the joint**.** Flexible joint sealants must be protected by a suitable wrapper, and the jointing material must maintain integrity when the wrapper is removed.

464.3. Construction.

A. Excavation, Shaping, Bedding, and Backfill. Excavate, shape, bed, and backfill in accordance with Item 400, "Excavation and Backfill for Structures," except where jacking, boring, or tunneling methods are permitted. Jack, bore, or tunnel the pipe in accordance with Item 476, "Jacking, Boring, or Tunneling Pipe or Box." If joints consist of materials other than mortar, immediate backfilling is permitted. Take special precautions in placing and compacting the backfill to avoid any movement of the pipe or damage to the joints. Unless otherwise shown on the plans or permitted in writing, do not use heavy earth-moving equipment to haul over the structure until a minimum of 4 ft. of permanent or temporary compacted fill has been placed over the structure. Remove and replace pipe damaged by the Contractor at no expense to the Department.

B. Laying Pipe. Unless otherwise authorized, start the laying of pipe on the bedding at the outlet end with the spigot or tongue end pointing downstream, and proceed toward the inlet end with the abutting sections properly matched, true to the established lines and grades. Fit, match, and lay the pipe to form a smooth, uniform conduit. Where bell-and-spigot pipe is used, cut cross trenches in the foundation to allow the barrel of the pipe to rest firmly upon the bedding. Do not cut cross trenches more than 2 in. larger than the bell ends of the pipe. Lower sections of pipe into the trench without damaging the pipe or disturbing the bedding and the sides of the trench. Carefully clean the ends of the pipe before the pipe is placed. Prevent the earth or bedding material from entering the pipe as it is laid. When elliptical pipe with circular reinforcing or circular pipe with elliptical reinforcing is used, lay the pipe in the trench so that the markings for the top or bottom are not more than 5° from the vertical plane through the longitudinal axis of the pipe. Remove and re-lay, without extra compensation, pipe that is not in alignment or that shows excessive settlement after laying.

Lay multiple lines of reinforced concrete pipe with the centerlines of the individual barrels parallel. Unless otherwise shown on the plans, use the clear distances between outer surfaces of adjacent pipes shown in Table 5. For arch pipe or horizontal elliptical pipe use the equivalent diameter from Table 2 or Table 3 to determine the clear distance requirement in Table 5.

Table 5
Minimum Clear Distance between Pipes

Equivalent Diameter	Min. Clear Distance
18 in.	9 in.
24 in.	11 in.
30 in.	1 ft. 1 in.
36 in.	1 ft. 3 in.
42 in.	1 ft. 5 in.
48 in.	1 ft. 7 in.
54 in.	1 ft. 11 in.
60 to 84 in.	2 ft.

C. Jointing. Make available an appropriate rolling device similar to an automobile mechanic's "creeper" for conveyance through small-size pipe structures.

1. **Joints Sealed with Hydraulic Cement Mortar.** Use mortar consisting of 1 part cement, 2 parts sand, and enough water to make a plastic mix. Clean and wet the pipe ends before making the joint. Plaster the lower half of the bell or groove and the upper half of the tongue or spigot with mortar. After the pipes are tightly jointed, pack mortar into the joint from both inside and outside the pipe. Finish the inside smooth and flush with adjacent joints of pipe. For tongue-and-groove joints, form a bead of semicircular cross section over the joint outside the pipe, extending at least 1 in. on each side of the joint. For bell-and-spigot joints, form the mortar to a 45° fillet between the outer edge of the bell and the spigot. Cure mortar joints by keeping the joints wet for at least 48 hr. or until the backfill has been completed, whichever comes first. When mortar joints are used, do not place fill or backfill until the jointing material has cured for at least 6 hr. Do not conduct jointing when the atmospheric temperature is at or below 40°F. Protect mortared joints against freezing by backfilling or other approved methods for at least 24 hr.

   Driveway culverts do not require mortar banding on the outside of the pipe.

   With approval, pipes that are large enough for a person to enter may be furnished with the groove between 1/2 in. and 3/4 in. longer than the tongue. Such pipe may be laid and backfilled without mortar joints. After the backfilling has been completed, clean the space on the interior of the pipe between the end of the tongue and the groove of all foreign material, thoroughly wet and fill with mortar around the entire circumference of the pipe, and finish flush.

2. **Joints Using Cold-Applied, Plastic Asphalt Sewer Joint Compound.** Ensure that both ends of the pipes are clean and dry. Trowel or otherwise place a 1/2-in.-thick layer of the compound in the groove end of the pipe covering at least 2/3 of the joint face around the entire circumference. Next, shove home the tongue end of the next pipe with enough pressure to make a tight joint. After the joint is made, remove any excess mastic projecting into the pipe. Backfill after the joint has been inspected and approved.

3. **Joints Using Rubber Gaskets.** Make the joint assembly according to the recommendations of the gasket manufacturer. When using rubber gaskets, make joints watertight. Backfill after the joint has been inspected and approved.

4. **Joints Using Pre-Formed Flexible Joint Sealants.** Install pre-formed flexible joint sealants in accordance with the manufacturer's recommendations. Place the joint sealer so that no dirt or other deleterious materials come in contact with the joint sealing material. Pull or push home the pipe with enough force to properly seal the joint. Remove any joint material pushed out into the interior of the pipe that would tend to obstruct the flow. When the atmospheric temperature is below 60°F, store pre-formed flexible joint sealants in an area warmed to above 70°F or artificially warm to this temperature in an approved manner. Apply flexible joint sealants to pipe joints immediately before placing pipe in trench, and then connect pipe to previously laid pipe. Backfill after the joint has been inspected and approved.

D. Connections and Stub Ends. Make connections of concrete pipe to existing pipes, pipe storm drains, or storm drain appurtenances as shown on the plans.

Mortar or concrete the bottom of existing structures if necessary to eliminate any drainage pockets created by the connections. Repair any damage to the existing structure resulting from making the connections.

Unless otherwise shown in the plans, make connections between concrete pipe and corrugated metal pipe with a suitable concrete collar having a minimum thickness of 4 in.

Finish stub ends for connections to future work not shown on the plans by installing watertight plugs into the free end of the pipe.

Fill lift holes with concrete, mortar, or precast concrete plugs after the pipe is in place.

464.4. Measurement. This Item will be measured by the foot. Measurement will be made between the ends of the pipe barrel along the flow line, not including safety end treatments. Safety end treatments will be measured in accordance with Item 467, “Safety End Treatment.” Pipe that will be jacked, bored, or tunneled will be measured in accordance with Item 476, “Jacking, Boring, or Tunneling Pipe or Box.” Measurement of spurs, branches, or new connecting pipe will be made from the intersection of the flow line with the outside surface of the pipe into which it connects. Where inlets, headwalls, catch basins, manholes, junction chambers, or other structures are included in lines of pipe, the length of pipe tying into the structure wall will be included for measurement, but no other portion of the structure length or width will be included.

For multiple pipes, the measured length will be the sum of the lengths of the barrels.

This is a plans quantity measurement Item. The quantity to be paid is the quantity shown in the proposal unless modified by Article 9.2. “Plans Quantity Measurement.” Additional measurements or calculations will be made if adjustments of quantities are required.

464.5. Payment. The work performed and materials furnished in accordance with this Item and measured as provided under “Measurement” will be paid for at the unit price bid for “Reinforced Concrete Pipe,” “Reinforced Concrete Pipe (Arch),” or “Reinforced Concrete Pipe (Elliptical)” of the size and D-load specified or of the size and class specified. This price is full compensation for constructing, furnishing, transporting, placing, and joining pipes; shaping the bed; cutting pipes on skew or slope; connecting to new or existing structures; breaking back, removing, and disposing of portions of the existing structure; replacing portions of the existing structure; cutting pipe ends on skew or slope; and equipment, labor, tools, and incidentals.

Protection methods for excavations greater than 5 ft. deep will be measured and paid for as required under Item 402, “Trench Excavation Protection,” or Item 403, “Temporary Special Shoring.” Excavation, shaping, bedding, and backfill will be paid for in accordance with Item 400, “Excavation and Backfill for Structures.” When jacking, boring, or tunneling is used at the Contractor’s option, payment will be made under this Item. When jacking, boring or tunneling is required, payment will be made under Item 476, “Jacking, Boring or Tunneling Pipe or Box.”

ITEM 465

MANHOLES AND INLETS

465.1. Description. Construct manholes and inlets, complete in place or to the stage detailed, including furnishing and installing frames, grates, rings and covers. Drainage junction boxes are classified as manholes.

465.2. Materials. Furnish materials in accordance with the following:

- Item 420, "Concrete Structures"
- Item 421, "Hydraulic Cement Concrete"
- Item 440, "Reinforcing Steel"
- Item 471, "Frames, Grates, Rings, and Covers."

Precast manholes, inlets, risers, and appurtenances are acceptable unless otherwise shown. Alternate designs for precast items must be acceptable to the Engineer and not deviate from the functional dimensions given. Alternate designs are to be designed and sealed by a licensed professional engineer.

A. Concrete. Furnish Class A concrete for cast-in-place manholes and inlets unless otherwise shown on the plans. Furnish Class A concrete or concrete meeting ASTM C 478 for precast manholes and inlets. Air-entrained concrete will not be required in precast concrete members.

B. Mortar. Furnish mortar composed of 1 part hydraulic cement and 2 parts clean sand. Hydrated lime or lime putty may be added to the mix to a maximum of 10% by weight of the total dry mix.

C. Bricks. Furnish first-quality, sound, perfectly shaped bricks. Provide clay or shale bricks that are homogeneous and thoroughly and uniformly hard-burned and that meet ASTM C 32, Grade MS or MM. Provide concrete bricks meeting ASTM C 55, Type I (Grade S-I). The maximum allowable water absorption of completely dry bricks is 16% by weight when submerged in water for 24 hr.

D. Concrete Blocks. Provide concrete blocks that meet ASTM C 139.

E. Cast Iron or Aluminum. Provide supports and steps conforming to the shape and dimensions shown on the plans that meet the requirements of ASTM A 48, Class 35B, for gray iron castings or ASTM A 536, Grade 65-45-12, for ductile iron castings. Steps may also be aluminum meeting ASTM B 221, Alloy 6005-T5. Provide steps in accordance with ASTM C 478, Section 16, "Steps and Ladders."

F. Timber. Provide sound timber for temporary covers when used with Stage I construction (see Section 465.3, "Construction") that is a minimum of 3 in. nominal thickness and reasonably free of knots and warps.

G. Other Materials. Commercial-type hardware of other materials may be used with prior approval.

465.3. Construction.

A. General. All types of manholes and inlets may be built either in 1 stage or in 2 stages, described as Stage I and Stage II. Build manholes and inlets designed to match

the final roadway surface in stages. Construct Stage II after the pavement structure is substantially complete unless otherwise approved by the Engineer.

Construct the Stage I portion of manholes and inlets as shown on the plans or as specified in this Item. Furnish and install a temporary cover as approved by the Engineer.

For Stage I construction of cast iron or steel inlet units, furnish and install the sewer pipe and a temporary plug for the exposed end of the sewer pipe from the storm sewer to a point below the top of curb indicated on the plans.

For Stage II, construct the remaining wall height and top of manhole or inlet and furnish and install any frames, grates, rings and covers, manhole steps, curb beams, or collecting basins required.

Construct precast manholes and inlets in accordance with Item 420, "Concrete Structures," or ASTM C 478. Construct cast-in-place manholes and inlets in accordance with Item 420. Forms will be required for all concrete walls. Multi-project fabrication plants (as defined in Item 424, "Precast Concrete Structures (Fabrication)") that produce manholes and inlets will be approved by the Construction Division in accordance with DMS-7340, "Qualification Procedure for Multi-Project Fabrication Plants of Precast Concrete Manholes and Inlets." The Construction Division maintains a list of approved multiproject plants. Outside wall forms for cast-in-place concrete may be omitted with the approval of the Engineer if the surrounding material can be trimmed to a smooth vertical face. The outside form for concrete bases supporting brick walls may be omitted. Cast steps into the concrete walls when the concrete is placed, or drill and grout steps in place after concrete placement. Mortar steps into joints for brick walls. Use a full bed of mortar for brick work so the brick will thoroughly bond to the mortar. Construct full mortar joints no more than 1/2 in. wide for brick walls. Furnish a header course or bond course (laid perpendicular to the preceding courses) every fifth course of brick.

B. Manholes and Inlets for Precast Concrete Pipe Sewers. Construct manholes and inlets for precast concrete pipe sewers as soon as is practicable after sewer lines into or through the manhole or inlet locations are completed. Neatly cut all sewers at the inside face of the walls of the manhole or inlet and point up with mortar.

C. Manholes and Inlets for Monolithic Pipe Sewers. Construct bases for manholes and inlets on monolithic pipe sewers either monolithically with the sewer or after the sewer is constructed.

D. Manholes for Box Sewers. Cast bases for manholes for box sewers as an integral part of the sewer. Construct manholes before backfilling, or cover the manhole opening temporarily and backfill the sewer as a whole.

E. Inverts. Shape and route floor inverts passing out or through the manhole or inlet as shown on the plans. Shape by adding and shaping mortar or concrete after the base is cast or by placing the required additional material with the base.

F. Finishing Complete Manholes and Inlets. Complete manholes and inlets in accordance with the plans. Backfill to original ground elevation in accordance with Item 400, "Excavation and Backfill for Structures."

G. **Finishing Stage I Construction.** Complete Stage I construction by constructing the walls to the elevations shown on the plans and backfilling to required elevations in accordance with Item 400, “Excavation and Backfill for Structures.”

H. **Stage II Construction.** Construct subgrade and base course or concrete pavement construction over Stage I manhole or inlet construction, unless otherwise approved by the Engineer. Excavate to expose the top of Stage I construction and complete the manhole or inlet in accordance with the plans and these Specifications, including backfill and cleaning of all debris from the bottom of the manhole or inlet.

I. **Inlet Units.** Install cast iron or steel inlet units in conjunction with the construction of concrete curb and gutter. Set the inlet units securely in position before placing concrete for curb and gutter. Form openings for the inlets and recesses in curb and gutter as shown on the plans. Place and thoroughly consolidate concrete for curb and gutter adjacent to inlets and around the inlet castings and formed openings and recesses without displacing the inlet units.

465.4. Measurement. All manholes and inlets satisfactorily completed in accordance with the plans and specifications will be measured by each manhole or inlet, complete, or by each manhole or inlet completed to the stage of construction required by the plans. Extension to inlets will be measured by each extension separately from the inlet.

465.5. Payment. The work performed and materials furnished in accordance with this Item and measured as provided under “Measurement” will be paid for as follows:

A. **Complete Manholes.** Payment for complete manholes will be made at the unit price bid for “Manhole (Complete)” of the type specified.

B. **Complete Inlets.** Payment for inlets will be made at the unit price bid for “Inlet (Complete),” of the type specified.

C. **Inlet Extensions.** Payment for inlet extensions will be made at the unit price bid for “Inlet Extension” of the type specified.

D. **Manholes Stage I.** Payment for Manholes, Stage I, will be made at the unit price bid for each “Manhole (Stage I)” of the type specified.

E. **Manholes Stage II.** Payment for Manholes, Stage II, will be made at the unit price bid for each “Manhole (Stage II)” of the type specified.

F. **Inlets Stage I.** Payment for Inlets, Stage I, will be made at the unit price bid for each “Inlet (Stage I)” of the type specified.

G. **Inlets Stage II.** Payment for Inlets, Stage II, will be made at the unit price bid for each “Inlet (Stage II)” of the type specified.

These price are full compensation for concrete, reinforcing steel, brick, mortar, aluminum and castings, frames, grates, rings and covers, excavation, and backfill and for all other materials, tools, equipment, labor, and incidentals.

ITEM 466

HEADWALLS AND WINGWALLS

466.1. Description. Furnish, construct, and install concrete headwalls and wingwalls for drainage structures and underpasses.

466.2. Materials.

A. General. Furnish materials in accordance with the following:

- Item 420, "Concrete Structures"
- Item 421, "Hydraulic Cement Concrete"
- Item 440, "Reinforcing Steel."

Unless otherwise shown on the plans, use Class C concrete for cast-in-place and precast concrete units. Furnish cast-in-place or precast headwalls and wingwalls unless otherwise shown on the plans.

B. Fabrication.

1. **General.** Fabricate cast-in-place concrete units and precast units in accordance with Item 420, "Concrete Structures." For headwalls and wingwalls use the following definitions:
   - "Headwalls" refers to all walls, including wings, at the ends of single-barrel and multiple-barrel pipe culvert structures.
   - "Wingwalls" refers to all walls at the ends of single-barrel or multiple-barrel box culvert structures.
2. **Lifting Holes.** For precast units, provide no more than 4 lifting holes in each section. Lifting holes may be cast, cut into fresh concrete after form removal, or drilled. Provide lifting holes large enough for adequate lifting devices based on the size and weight of the section. The maximum hole diameter is 3 in. at the inside surface of the wall and 4 in. at the outside surface. Do not cut more than 1 longitudinal wire or 2 circumferential wires per layer of reinforcing steel when locating lift holes. Repair spalled areas around lifting holes.
3. **Marking.** Before shipment from the casting or fabrication yard, clearly mark the following on each precast unit:
   - the date of manufacture,
   - the name or trademark of the manufacturer, and
   - the type and size designation.
4. **Storage and Shipment.** Store precast units on a level surface. Do not place any loads on precast concrete units until design strength is reached. Do not ship units until design strength requirements have been met.
5. **Causes for Rejection.** Precast units may be rejected for not meeting any one of the specification requirements. Individual units may also be rejected for fractures or cracks passing through the wall or surface defects indicating honeycombed or open texture surfaces. Remove rejected units from the project, and replace them with acceptable units meeting the requirements of this Item.

6. **Defects and Repairs.** Occasional imperfections in manufacture or accidental damage sustained during handling may be repaired. The repaired units will be acceptable if they conform to the requirements of this Item and the repairs are sound, properly finished, and cured in conformance with pertinent specifications.

466.3. Construction.

A. General. Remove portions of existing structures in accordance with Item 430.3, "Construction." Drill, dowel, and grout in accordance with Item 420, "Concrete Structures."

B. Excavation, Shaping, Bedding, and Backfill. Excavate, shape, bed, and backfill in accordance with Item 400, "Excavation and Backfill for Structures." Take special precautions in placing and compacting the backfill to avoid any movement or damage to the units. Bed precast units on foundations of firm and stable material accurately shaped to conform to the bases of the units.

C. Placement of Precast Units. Provide adequate means to lift and place the precast units. Fill lifting holes with mortar or concrete and cure. Precast concrete or mortar plugs may be used.

D. Connections. Make connections to new or existing structures in accordance with the details shown on the plans. Furnish jointing material in accordance with Item 464, "Reinforced Concrete Pipe," or as shown on the plans.

When removing existing headwalls, also remove a length of the existing pipe from the headwall to the joint as shown on the plans or as approved. Re-lay the removed pipe if approved, or furnish and lay a length of new pipe.

466.4. Measurement. This is a plans quantity measurement item. The quantity to be paid is the quantity shown in the proposal unless modified by Article 9.2, "Plans Quantity Measurement." Additional measurements or calculations will be made if adjustments of quantities are required.

A. Headwalls. Headwalls will be measured by each end of a structure.

B. Wingwalls. Wingwalls will be measured by one of the following methods:

1. **Square Foot.** Wingwalls will be measured by the square foot of the front surface area of the wall of each type. Unless otherwise shown on the plans, the area will be measured from the top of the footing or apron to the top of the wall. If there is no footing or apron, then measurement is from the bottom of the wall.
2. **Each.** Wingwalls will be measured by each end of a structure.

466.5. Payment. The work performed and materials furnished in accordance with this Item and measured as provided under "Measurement" will be paid for at the price bid for "Headwalls" of the type and pipe size (diameter or design) specified, "Wingwalls" of the type specified when measurement is by the square foot, or "Wingwalls" of the type and wall height specified when measurement is by each. For payment purposes, the wingwall height will be rounded to the nearest foot. This price is full compensation for constructing, furnishing, transporting, and installing the headwalls or wingwalls; connecting to existing structure; breaking back, removing and disposing of portions of the existing structure, and replacing portions of the existing structure as required to make

connections; excavation and backfill; and concrete, reinforcing steel, corrugated metal pipe or reinforced concrete pipe, equipment, labor, tools, and incidentals.

Apron concrete or riprap between or around the wingwalls of single- or multiple-barrel box culvert structures will be measured and paid for in accordance with Item 432, “Riprap.”

The removal and re-laying of existing pipe or the furnishing of new pipe to replace existing pipe will not be paid for directly but will be considered subsidiary to this Item.

ITEM 467

SAFETY END TREATMENT

467.1. Description. Furnish, construct, and install safety end treatments for drainage structures.

467.2. Materials.

A. General. Furnish materials in accordance with the following:

- Item 420, “Concrete Structures”
- Item 421, “Hydraulic Cement Concrete”
- Item 432, “Riprap”
- Item 440, “Reinforcing Steel”
- Item 442, “Metal for Structures”
- Item 445, “Galvanizing”
- Item 460, “Corrugated Metal Pipe”
- Item 464, “Reinforced Concrete Pipe.”

Unless otherwise shown on the plans, use Class C concrete for cast-in-place and precast concrete units. Furnish cast-in-place or precast safety end treatments unless otherwise shown on the plans. Furnish Class B concrete for concrete riprap unless otherwise shown on the plans. Provide galvanized steel for prefabricated metal end sections in accordance with Item 460, “Corrugated Metal Pipe.”

Furnish pipe runners in accordance with the following:

- ASTM A 53, Type E or S, Grade B;
- ASTM A 500, Grade B; or
- API 5L, Grade X42.

Furnish plates and angles in accordance with ASTM A 36. Furnish nuts and bolts in accordance with ASTM A 307. Galvanize pipes, plates, angles, nuts, and bolts in accordance with Item 445, “Galvanizing.”

B. Fabrication. Fabricate cast-in-place concrete units and precast units in accordance with Item 420, “Concrete Structures.” Unless otherwise shown on the plans, when corrugated metal pipe (CMP) is specified for the pipe structure, provide either prefabricated metal end sections or mitered CMP.

Unless otherwise shown on the plans, when reinforced concrete pipe (RCP) is specified for the pipe structure, provide one of the following:

- mitered RCP or
- precast safety end treatment (SET) units. For this alternative, provide riprap only if the plans specifically require it for precast SET units.

1. SET Types.

a. Type I. Provide Type I SET consisting of reinforced concrete headwalls or wingwalls and pipe runners in accordance with the details shown on the plans when required.

b. **Type II.** Provide Type II SET in accordance with the details shown on the plans consisting of the following:
   - CMP or RCP mitered to the proper slope, concrete riprap and pipe runners, when required;
   - prefabricated metal end sections, concrete riprap and pipe runners, when required; or
   - precast SET units, concrete riprap, when required, and pipe runners, when required.

2. **Lifting Holes.** For precast units, provide no more than 4 lifting holes in each section. Lifting holes may be cast, cut into fresh concrete after form removal, or drilled. Provide lifting holes large enough for adequate lifting devices based on the size and weight of the section. The maximum hole diameter is 3 in. at the inside surface of the wall and 4 in. at the outside surface. Do not cut more than 1 longitudinal wire or 2 circumferential wires per layer of reinforcing steel when locating lift holes. Repair spalled areas around lifting holes.

3. **Marking.** Prior to shipment from the casting or fabrication yard, clearly mark the following on each precast unit, mitered CMP, mitered RCP, or metal end section:
   - the date of manufacture,
   - the name or trademark of the manufacturer, and
   - the type and size designation.

4. **Storage and Shipment.** Store precast units on a level surface. Do not place any loads on precast units until the design strength is reached. Do not ship units until design strength requirements have been met.

5. **Causes for Rejection.** Precast units may be rejected for not meeting any one of the specification requirements. Individual units may also be rejected for fractures or cracks passing through the wall or surface defects indicating honeycombed or open texture surfaces. Remove rejected units from the project and replace them with acceptable units meeting the requirements of this Item.

6. **Defects and Repairs.** Occasional imperfections in manufacture or accidental damage sustained during handling may be repaired. The repaired units will be acceptable if they conform to the requirements of this Item and the repairs are sound and properly finished and cured in conformance with pertinent specifications. Repair damaged galvanizing in accordance with Section 445.3.D, "Repairs."

467.3. Construction.

A. **General.** Remove portions of existing structures in accordance with Article 430.3, "Construction." Drill, dowel, and grout in accordance with Item 420, "Concrete Structures." Furnish concrete riprap in accordance with Item 432, "Riprap."

   Provide riprap on all prefabricated metal end sections.

B. **Excavation, Shaping, Bedding, and Backfill.** Excavate, shape, bed, and backfill in accordance with Item 400, "Excavation and Backfill for Structures." Take special precautions in placing and compacting the backfill to avoid any movement or damage

to the units. Bed precast units on foundations of firm and stable material accurately shaped to conform to the bases of the units.

C. Placement of Precast Units. Provide adequate means to lift and place the precast units. Fill lifting holes with mortar or concrete and cure. Precast concrete or mortar plugs may be used.

D. Connections. Make connections to new or existing structures in accordance with the details shown on the plans. Furnish jointing material in accordance with Item 464, "Reinforced Concrete Pipe."

When removing existing headwalls, also remove a length of the existing pipe from the headwall to the joint as shown on the plans or as approved. Re-lay the removed pipe if approved, or furnish and lay a length of new pipe.

467.4. Measurement. SETs of all types will be measured by each barrel of each structure end.

467.5. Payment. The work performed and materials furnished in accordance with this Item and measured as provided under "Measurement" will be paid for at the unit price bid for the various designations of "Safety End Treatment" specified as follows:

- SET (Type I) (Barrel Span) (Wall Height) (Slope, Horizontal:Vertical) (Orientation, Cross or Parallel)
- SET (Type I) (Pipe Diameter or Design) (Slope, Horizontal:Vertical) (Orientation, Cross or Parallel)
- SET (Type II) (Pipe Diameter or Design) (Pipe Material) (Slope, Horizontal:Vertical) (Orientation, Cross or Parallel)

For payment purposes, the wingwall heights of Type I SETs for box culverts will be rounded to the nearest foot.

This price is full compensation for constructing, furnishing, transporting, and installing the end treatments; connecting to existing structure; breaking back, removing and disposing of portions of the existing structure, and replacing portions of the existing structure as required to make connections; excavation and backfill; furnishing concrete, reinforcing steel, corrugated metal pipe or reinforced concrete pipe, and pipe runners; and concrete riprap, nuts, bolts, plates, angles, equipment, labor, tools, and incidentals.

The removal and re-laying of existing pipe or the furnishing of new pipe to replace existing pipe will not be paid for directly but will be considered subsidiary to this Item.

The mitered length of CMP or RCP that is a part of the SET (Type II) will not be paid for directly but will be considered subsidiary to this Item. The limits for payment for pipe will be as shown on the plans and paid for in accordance with the pertinent bid item.

The limits of riprap to be included in the price bid for each SET will be shown on the plans. Any riprap placed beyond the limits shown will be paid in accordance with Item 432, "Riprap." Riprap between multiple precast SET units will be required as shown on the plans and is included in the price bid for SET.

When precast SETs are provided as an option to mitered RCP, riprap aprons will not be required unless the plans specifically require riprap aprons for precast SET units. The plans will show the limits of the riprap to be included with the precast SET for payment.

ITEM 471

FRAMES, GRATES, RINGS, AND COVERS

471.1. Description. Furnish and install frames, grates, rings and covers for inlets, manholes, and other structures.

471.2. Materials.

A. Welded Steel Grates and Frames. Provide welded steel grates and frames as an assembly conforming to the member size, dimensions, and details shown on the plans. Fabricate these assemblies in accordance with Item 441, "Steel Structures." Use steel that meets ASTM A 36 or equal.

B. Frame, Grate, Ring, and Cover Castings. Provide clean castings conforming to the shape and dimensions shown on the plans. Ensure that the castings are free from sand and blow holes or other defects and that surfaces of the castings are reasonably smooth. Remove runners, risers, fins, and other cast-on pieces from the castings, and grind these areas smooth. Cast or machine the bearing surfaces between manhole rings and covers and between grates and frames with such precision that uniform bearing is provided throughout the perimeter area of contact. Matchmark pairs of machined castings for proper identification at installation.

Provide steel castings conforming to ASTM A 27. Furnish Grade 70-36 unless otherwise specified. Provide gray iron castings conforming to ASTM A 48, Class 35B. Provide ductile iron castings conforming to ASTM A 536. Use Grade 65-45-12 unless otherwise specified. Frame, grate, ring, and cover castings must meet the proof-load testing requirements of AASHTO M 306. Use commercial type frames, rings, risers or appurtenances only with prior approval of the Engineer.

C. Documentation. Furnish mill test reports or manufacturer's certification to the Engineer for each lot or shipment of steel and iron materials. For castings, also furnish a manufacturer's certification stating that the casting meets the proof-load testing requirements of AASHTO M 306.

471.3. Construction. Construct and install frames, grates, rings, and covers in accordance with the details shown on the plans. Weld in accordance with Item 448, "Structural Field Welding." Tack-weld grates and covers to the frame or ring when directed by the Engineer.

Galvanize steel castings and welded steel grates and frames in accordance with Item 445, "Galvanizing." Galvanizing is not required for iron castings unless used in conjunction with structural steel shapes or shown on the plans.

Provide galvanized bolts and nuts in accordance with Item 445, "Galvanizing."

471.4. Measurement. Frames, grates, rings, and covers, when a part of the complete manhole or inlet, will not be measured for payment but will be considered subsidiary to Item 465, "Manholes and Inlets." Frames, grates, rings, and covers, when not a part of a Manhole (complete) or Inlet (complete), will be measured by the each.

471.5. Payment. When payment is required in accordance with "Measurement," payment for frames, grates, rings, and covers will be made at the unit price bid for "Grate," "Frame," "Grate and Frame," "Frame and Cover," or "Ring and Cover." This price is full compensation for equipment, materials, labor, tools, and incidentals.

ITEM 479

ADJUSTING MANHOLES AND INLETS

479.1. Description. Adjust or cap existing manholes or inlets. Drainage junction boxes will be classified as manholes.

479.2. Materials. Reuse removed manhole and inlet rings, plates, grates, covers, and brick if they are in good condition as determined by the Engineer. Provide additional materials in accordance with Item 465, "Manholes and Inlets," at no cost to the Department. Single- or multiple-piece prefabricated metal extension rings may be used for the adjustment of manholes as approved. Provide concrete that meets Item 421, "Hydraulic Cement Concrete."

479.3. Construction. Perform all work in accordance with Item 465, "Manholes and Inlets." Excavate and backfill in accordance with Item 400, "Excavation and Backfill for Structures." Carefully remove manhole and inlet rings, covers, plates, and grates to be reused. Clean mortar and grease from the contact areas of all reused items. Dispose of unused removed material as directed. Use construction methods described in Sections 479.3.A, "Lowering the Top of a Manhole or Inlet," and 479.3.B, "Raising the Top of a Manhole or Inlet," unless otherwise shown on the plans.

A. Lowering the Top of a Manhole or Inlet. Remove a sufficient depth of brick courses or concrete to permit reconstruction on a batter not exceeding 1 in. horizontal to 2 in. vertical. Where brickwork is present, clean the mortar from the top course of brick. Rebuild the manhole or inlet to the original top dimensions or to the dimensions shown in the plans. Install the manhole or inlet ring and the cover, plate, or grate to conform to the proposed new surface contour.

B. Raising the Top of a Manhole or Inlet. Clean the top surface of brick or concrete. Construct to the proper new elevation using new brick, brick salvaged from other manholes or inlets, prefabricated metal extension rings, concrete rings, or Class A concrete. Install the manhole or inlet ring and the cover, plate, or grate to conform to the proposed new surface contour. Install prefabricated extension rings in accordance with manufacturer's instructions.

C. Capping an Inlet or Manhole. Remove the inlet or manhole to a minimum of 1 ft. below subgrade elevation or as indicated on the plans. Cap as shown on the plans.

479.4. Measurement. Adjusted or capped manholes or inlets will be measured as each manhole or inlet adjusted.

479.5. Payment. The work performed and materials furnished in accordance with this Item and measured as provided under "Measurement" will be paid for at the unit price bid for "Adjusting Manholes," "Adjusting Inlets," or "Adjusting Manholes and Inlets." This price is full compensation for materials, including backfill as required, and for excavation, tools, equipment, labor, and incidentals.

ITEM 502

BARRICADES, SIGNS, AND TRAFFIC HANDLING

502.1. Description. Provide, install, move, replace, maintain, clean, and remove upon completion of work all barricades, signs, cones, lights, and other traffic control devices used for traffic handling as indicated on the plans and as directed.

502.2. Construction. Provide traffic control devices that conform to details shown on the plans, the TMUTCD, and the Compliant Work Zone Traffic Control Device List (CWZTCDL) maintained by the Traffic Operations Division.

A. Implementation. Before beginning work, designate in writing a Contractor's Responsible Person (CRP) to be the representative of the Contractor who is responsible for taking or directing corrective measures of installation and maintenance deficiencies as soon as possible. The CRP must be accessible by phone and able to respond to emergencies 24 hours per day.

Follow the traffic control plan (TCP) and install traffic control devices as shown on the plans and as directed. Install traffic control devices straight and plumb. Do not make changes to the location of any device or implement any other changes to the TCP without the approval of the Engineer. Minor adjustments to meet field constructability and visibility are allowed.

Submit Contractor-proposed TCP changes, signed and sealed by a licensed professional engineer, to the Engineer for approval. The Engineer may develop, sign, and seal Contractor-proposed changes. Changes must conform to guidelines established in the TMUTCD using approved products from the CWZTCDL.

Maintain traffic control devices by taking corrective action as soon as possible. Corrective action includes but is not limited to cleaning, replacing, straightening, covering, or removing devices. Maintain the devices such that they are properly positioned, spaced, and legible, and that retroreflective characteristics meet requirements during darkness and rain.

B. Flaggers. Provide a Contractor representative who has been certified as a flagging instructor through courses offered by the Texas Engineering Extension Service, the American Traffic Safety Services Association, the National Safety Council, or other approved organizations. Provide the certificate indicating course completion when requested. This representative is responsible for training and assuring that all flaggers are qualified to perform flagging duties. A qualified flagger must be independently certified by one of the organizations listed above or trained by the Contractor's certified flagging instructor. Provide the Engineer with a current list of qualified flaggers before beginning flagging activities. Use only flaggers on the qualified list.

Flaggers must be courteous and able to effectively communicate with the public. When directing traffic, flaggers must use standard attire, flags, signs, and signals and follow the flagging procedures set forth in the TMUTCD.

C. Removal. Upon completion of work, remove all barricades, signs, cones, lights, and other traffic control devices used for work-zone traffic handling, unless otherwise shown on the plans.

502.3. Measurement. This Item will be measured by the month.

502.4. Payment. The work performed and materials furnished in accordance with this Item and measured as provided under "Measurement" will be paid for at the unit price bid for "Barricades, Signs, and Traffic Handling." This price is full compensation for installation, maintenance, adjustments, replacements, removal, materials, equipment, labor, tools, and incidentals.

When the plans establish pay items for particular work called for in the TCP, that work will be measured and paid for under pertinent Items.

A. Initiation of Payment. Payment for this Item will begin on the first estimate after barricades, signs, and traffic handling devices have been installed in accordance with the TCP and construction has begun. Installation of the project limit advance warning signs alone is not considered the beginning of construction.

B. Paid Months. Monthly payment will be made each succeeding month for this Item provided the barricades, signs, and traffic handling devices have been installed and maintained in accordance with the TCP until the Contract amount has been paid.

If, within the time frame established by the Engineer, the Contractor fails to provide or properly maintain signs and barricades in compliance with the Contract requirements, as determined by the Engineer, the Contractor will be considered in noncompliance with this Item. No payment will be made for the months in question, and the total final payment quantity will be reduced by the number of months the Contractor was in noncompliance.

C. Maximum Total Payment Prior to Acceptance. The total payment for this Item will not exceed 10% of the total Contract amount before final acceptance in accordance with Article 5.8, "Final Acceptance." However, when all work is complete for all project locations, except for work for vegetative establishment and maintenance periods and performance and test periods, the 10% of the total Contract amount may be exceeded. The remaining balance will be paid in accordance with Section 502.4.E, "Balance Due."

D. Total Payment Quantity. The quantity paid under this Item will not exceed the total quantity shown in the plans except as modified by change order and as adjusted by Section 502.4.B, "Paid Months." An overrun of the plans quantity for this Item will not be allowed for approving designs; testing; material shortages; closed construction seasons; curing periods; establishment, performance, test, and maintenance periods; failure to complete the work in the number of months allotted; nor delays caused directly or indirectly by requirements of the contract.

E. Balance Due. If all work is complete and accepted in accordance with Article 5.8, "Final Acceptance," before payment of the amount allowed by this Article, the balance due will be paid on the next estimate after the initial retainage release estimate or final acceptance for projects without retainage.

F. Law Enforcement. Law enforcement required by the Engineer will be paid in accordance with Article 9.5, "Force Account."

ITEM 529

CONCRETE CURB, GUTTER, AND COMBINED CURB AND GUTTER

529.1. Description. Construct hydraulic cement concrete curb, gutter, and combined curb and gutter.

529.2. Materials. Furnish materials conforming to:

- Item 360, "Concrete Pavement"
- Item 420, "Concrete Structures"
- Item 421, "Hydraulic Cement Concrete"
- Item 440, "Reinforcing Steel."

Use Class A concrete or material specified in the plans. Use Grade 8 coarse aggregate for extruded Class A concrete. Use other grades if approved by the Engineer.

529.3. Construction. Provide finished work with a well-compacted mass and a surface free from voids and honeycomb, in the required shape, line, and grade. Round exposed edges with an edging tool of the radius shown on the plans. Mix, place, and cure concrete in accordance with Item 420, "Concrete Structures." Construct joints at locations shown on the plans. Cure for at least 72 hr.

Furnish and place reinforcing steel in accordance with Item 440, "Reinforcing Steel."

Set and maintain a guideline that conforms to alignment data shown on the plans, with an outline that conforms to the details shown on the plans.

A. Conventionally Formed Concrete. Shape and compact subgrade, foundation, or pavement surface to the line, grade, and cross section shown on the plans. Lightly sprinkle subgrade or foundation material immediately before concrete placement.

Pour concrete into forms, and strike off with a template 1/4 to 3/8 in. less than the dimensions of the finished curb unless otherwise approved. After initial set, plaster surface with mortar consisting of 1 part hydraulic cement and 2 parts fine aggregate. Brush exposed surfaces to a uniform texture.

Place curbs, gutters, and combined curb and gutters in 50-ft. maximum sections unless otherwise approved.

B. Extruded or Slipformed Concrete. Hand-tamp and sprinkle subgrade or foundation material before concrete placement. Provide clean surfaces for concrete placement. If required, coat cleaned surfaces with approved adhesive or coating at the rate of application shown on the plans or as directed. Place concrete with approved self-propelled equipment.

The forming tube of the extrusion machine or the form of the slipform machine must be easily adjustable vertically during the forward motion of the machine to provide variable heights necessary to conform to the established gradeline.

Attach a pointer or gauge to the machine so that a continual comparison can be made between the extruded or slipform work and the grade guideline. Other methods may be used when approved.

Finish surfaces immediately after extrusion or slipforming.

529.4. Measurement. This Item will be measured by the foot.

529.5. Payment. The work performed and materials furnished in accordance with this Item and measured as provided under "Measurement" will be paid for at the unit price bid for "Concrete Curb," "Concrete Curb (Mono)," or "Concrete Curb and Gutter" of the type specified. This price is full compensation for surface preparation of base, equipment, labor, materials, tools, and incidentals.

ITEM 530

INTERSECTIONS, DRIVEWAYS, AND TURNOUTS

530.1. Description. Construct and pave intersections, driveways, and turnouts. Pave existing intersections, driveways, and turnouts.

Intersections are considered to be areas off the travel lanes and shoulders of the Contract highway on the intersecting highway on the state system. The intersecting on-system highway work will be paid for under this Item only when shown on the plans.

Driveways are defined as private (residential or commercial) and public (county road and city street) access areas off the travel lanes and shoulders.

Turnouts include but are not limited to mailbox and litter barrel widenings.

530.2. Materials. Furnish materials that meet the following:

- Item 247, “Flexible Base”
- Item 260, “Lime Treatment (Road Mixed)”
- Item 263, “Lime Treatment (Plant Mixed)”
- Item 275, “Cement Treatment (Road Mixed)”
- Item 276, “Cement Treatment (Plant Mixed)”
- Item 292, “Asphalt Treatment (Plant Mix)”
- Item 316, “Surface Treatments”
- Item 330, “Limestone Rock Asphalt Pavement”
- Item 334, “Hot Mix–Cold Laid Asphalt Concrete Pavement”
- Item 340, “Dense-Graded Hot Mix Asphalt Concrete Pavement (Method)”
- Item 360, “Concrete Pavement”
- Item 421, “Hydraulic Cement Concrete”
- Item 440, “Reinforcing Steel.”

530.3. Construction. Construct and pave intersections, driveways, and turnouts, and pave existing intersections, driveways, and turnouts as shown on the plans or as directed. Place materials in accordance with construction Articles of pertinent Items. Provide uninterrupted access to adjacent property unless otherwise directed. Ensure that abrupt elevation changes in driveway or turnout areas that serve as sidewalks do not exceed 1/4 in. and that the sidewalk area cross slope does not exceed 2%. Ready-mix concrete and hand finishing will be permitted when concrete pavement is specified unless otherwise shown in the plans for intersections.

530.4. Measurement. This Item will be measured by each intersection, driveway, or turnout, or by the square yard of the final pavement surface. When “Intersections, Driveways, and Turnouts” or “Driveways and Turnouts” are bid, measurement will be restricted to the square yard.

530.5. Payment. The work performed and materials furnished in accordance with this Item and measured as provided under “Measurement” will be paid for at the unit price bid for “Intersections,” “Driveways,” “Turnouts,” “Intersections, Driveways, and Turnouts,” or “Driveways and Turnouts” of the surface specified (Concrete, Asphaltic Concrete Pavement, or Surface Treatment).

This price is full compensation for furnishing and operating equipment; excavation and embankment; base and pavement materials; and labor, materials, tools, and incidentals. Drainage structures will be measured and paid for in accordance with the pertinent bid Items. Bonus and penalties for quality control and quality assurance (QC/QA) materials will not apply when payment for those materials is made under this Item.

ITEM 531

SIDEWALKS

531.1. Description. Construct hydraulic cement concrete sidewalks.

531.2. Materials. Furnish materials conforming to the following:

- Item 360, “Concrete Pavement”
- Item 420, “Concrete Structures”
- Item 421, “Hydraulic Cement Concrete”
- Item 440, “Reinforcing Steel.”

Use Class A concrete or other concrete as specified. Use Grade 8 course aggregate for extruded Class A concrete. Use other grades if approved by the Engineer.

531.3. Construction. Shape and compact subgrade, foundation, or pavement surface to the line, grade, and cross-section shown on the plans. Lightly sprinkle subgrade or foundation material immediately before concrete placement. Hand-tamp and sprinkle foundation when placement is directly on subgrade or foundation materials. Remove and dispose of existing concrete in accordance with Item 104, “Removing Concrete.” Provide a clean surface for concrete placement directly on the surface material or pavement.

Mix and place concrete in accordance with the pertinent Items. Hand-finishing is allowed for any method of construction. Finish exposed surfaces to a uniform transverse broom finish surface. Curb ramps must include a detectable warning surface and conform to details shown on the plans. Install joints as shown on the plans. Brush all exposed surfaces to a smooth and uniform surface. Ensure that abrupt changes in sidewalk elevation do not exceed 1/4 inch, sidewalk cross slope does not exceed 2%, curb ramp grade does not exceed 8.3%, and flares adjacent to the ramp do not exceed 10% slope. Where a sidewalk crosses a concrete driveway, ensure that the sidewalk depth and reinforcement are not less than the driveway cross-sectional details shown on the plans.

Provide finished work with a well-compacted mass, a surface free from voids and honeycomb, and the required true-to-line shape and grade. Cure for at least 72 hr. in accordance with Item 420, “Concrete Structures.”

A. Conventionally Formed Concrete. Provide sidewalk sections separated by premold or board joint of the thickness shown on the plans in lengths greater than 8 ft. but less than 40 ft., unless otherwise directed. Terminate workday production at an expansion joint.

B. Extruded or Slipformed Concrete. Provide any additional surface finishing immediately after extrusion or slipforming as required on the plans. Construct joints at locations as shown on the plans or as directed.

531.4. Measurement. Sidewalks will be measured by the foot or by the square yard of surface area. Curb ramps will be measured by each unit. The unit will consist of the curb ramp, landing, adjacent flares or side curb, and detectable warning surface as shown on the plans.

531.5. Payment. The work performed and materials furnished in accordance with this Item and measured as provided under “Measurement” will be paid for at the unit price bid for “Concrete Sidewalks” of the width (for foot measurement) and of the depth specified or “Curb Ramps” of the type specified. This price is full compensation for surface preparation of base; materials; removal and disposal of existing concrete; excavation, hauling and disposal of excavated material; drilling and doweling into existing concrete curb, sidewalk, and pavement; repair of adjacent street or pavement structure damaged by these operations; and equipment, labor, materials, tools, and incidentals.

Sidewalks that cross and connect to concrete driveways or turnouts will be measured and paid for in accordance with Item 530, “Intersections, Driveways, and Turnouts.”

ITEM 556

PIPE UNDERDRAINS

556.1. Description. Install pipe underdrains.

556.2. Materials.

A. Pipe. Furnish the types and sizes of pipe specified on the plans. Use only one type of pipe for any underdrain system on the project. Use perforated pipe in areas to be drained, and use non-perforated pipe between the perforated pipe and the outfall.

1. **Type 1.** Corrugated steel pipe conforming to any type specified in AASHTO M 36, fabricated from corrugated galvanized sheet.
2. **Type 2.** Corrugated aluminum pipe conforming to AASHTO M 196, Type I or IA, fabricated from corrugated sheet.
3. **Type 3.** Bituminous-coated corrugated steel pipe conforming to the requirements of Type 1 and uniformly coated inside and out with a minimum thickness of 0.05 in. with a bituminous material meeting the requirements of Table 1 when tested in accordance with Tex-522-C.

Table 1
Requirements of Bituminous Material

Test	Requirements
Solubility, % by wt. in trichloroethylene	99.5 min.
Brittleness	Pass
Flow, in.	0.25 max

4. **Type 4.** Bituminous-coated corrugated aluminum pipe conforming to the requirement of Type 2 and uniformly coated inside and out with a minimum thickness of 0.05 in. with a bituminous material meeting the requirements of Table 1 when tested in accordance with Tex-522-C.
5. **Type 5.** Acrylonitrile-butadiene-styrene pipe conforming to ASTM D 2751, SDR-35. Perforations must meet the requirements of AASHTO M 278.
6. **Type 6.** Corrugated polyethylene plastic tubing conforming to ASTM M 252.
7. **Type 7.** Corrugated polyvinyl chloride (PVC) pipe conforming to ASTM F 949.
8. **Type 8.** Smooth-wall PVC pipe conforming to AASHTO M 278, Class PS 46.
9. **Type 9.** As shown on the plans.

B. Filter Material. Furnish hard, durable, and clean sand, gravel, crushed stone, or crushed shell, unless otherwise shown on the plans, free of clay balls or other organic or deleterious matter as determined by Tex-413-A, that meets the gradation by percent weight specified in Table 2. Do not furnish crushed limestone unless shown on the plans. Use only one type of filter material for any underdrain system on a project.

Table 2
Percent Retained On Sieve (Tex-401-A)

Sieve Size	Type A	Type B	Type C	Type D
1-1/2"	–	–	0–10	
3/4"	–	0–10	20–40	
3/8"	–	15–35	–	–
No. 4	0–10	35–55	40–60	0–5
No. 8				0–20
No.16				15–50
No. 20	35–65[1]	35–65[1]	35–65[1]	
No. 30				40–75
No. 50	75–100[1]	75–100[1]	75–100[1]	70–90
No. 100				90–100

1. Of the portion finer than No. 4 sieve.

Loss by decantation as determined by Tex-406-A must not exceed 1% of the material retained on a No. 4 sieve or 4% of the material passing a No. 4 sieve. Use Type B or Type C filter material around the underdrains unless otherwise shown on the plans. Do not place Type A or Type D filter material within 6 in. of perforations.

C. Filter Fabric. Meet DMS-6200, "Filter Fabric," Type 1.

D. Riprap. When required, provide concrete riprap in accordance with Item 432, "Riprap."

556.3. Construction. Begin excavation of the trench at the outfall and proceed toward its upper end, following the lines and grades shown on the plans or as directed by the Engineer. Hold the minimum horizontal limits of excavation for filter material to the dimensions shown in Table 3 or as shown on the plans.

Table 3
Minimum Horizontal Limits of Excavation for Filler Material

Depth of Trench (ft.)	Distance Outside Neat Lines of Pipe Underdrains (ft.)
0 to 6	1.00
Over 6 to 10	1.50
Over 10 to 15	2.00
Over 15	2.50

In areas to be drained, place filter fabric in the bottom and sides of the trench before placing pipe or filter material, as shown in Figure 1. Provide enough width of fabric to overlap on top of the filter material. Center perforated pipe in the excavated ditch with the perforations below the horizontal axis. Join the pipe with appropriate couplers if required. Join plastic pipe in accordance with the manufacturer's recommendations. Do not use tarpaper strips. Before placing filter material, obtain the Engineer's approval of pipe placement.

Place filter material at least 12 in. above the bottom of the pipe or as shown on the plans. Do not allow filter material to displace the pipe.

After placing pipe and filter material, lap filter fabric over the top of the filter material according to the manufacturer's recommendation or as shown on the plans.

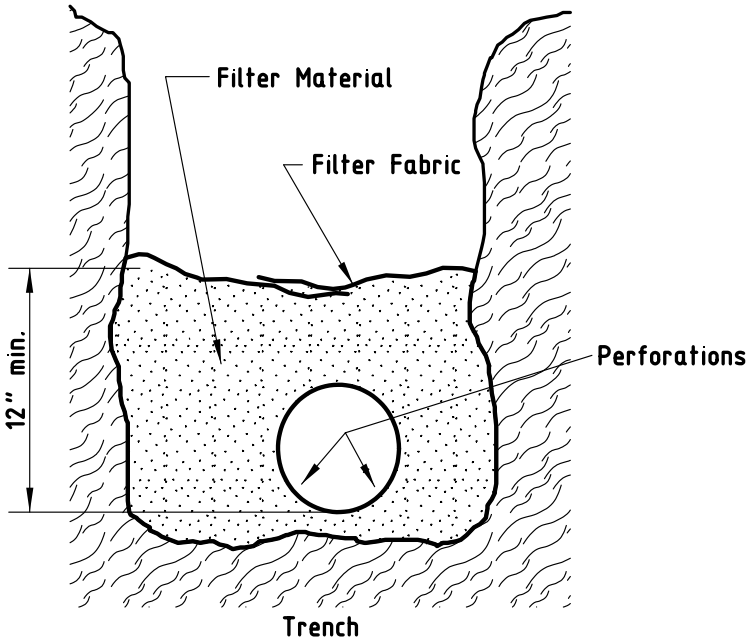

Figure 1
Installation process.

Install non-perforated pipe sections between the perforated pipe and the outfall. The sections of non-perforated pipe do not require filter fabric or filter material.

Place approved plugs in the upper ends of all pipe. Cover exposed outfall ends with 1/2-in. galvanized hardware cloth as directed by the Engineer. When required, provide Class B concrete riprap in accordance with Item 432, "Riprap," and details shown on the plans. Place the riprap to the contour and grade of the embankment slope. Cut the pipe to the slope of the riprap.

Backfill the remainder of the trench with suitable material in layers not to exceed 6 in.

556.4. Measurement. This Item will be measured by the foot along the top of the pipe and will include the length of elbows, Y's, T's, and other branches.

556.5. Payment. The work performed and material furnished in accordance with this Item and measured as provided under "Measurement" will be paid for at the unit price bid for "Pipe Underdrains" of the pipe type and size specified. This price is full compensation for pipe, couplers, plugs, screens, filter material, filter fabric, riprap, excavation, backfill, equipment, labor, materials, tools, and incidentals.

Protection methods for excavations deeper than 5 ft. will be measured and paid for in accordance with Item 402, "Trench Excavation Protection."

ITEM 560

MAILBOX ASSEMBLIES

560.1. Description. Install, remove, temporarily relocate, or replace mailbox assemblies of the type specified.

560.2. Materials. Furnish mailbox assemblies in accordance with the plans. Provide new mailbox assemblies for permanent installations.

560.3. Construction. Temporarily relocate mailbox assemblies as shown on the plans or as directed. Furnish and mount mailboxes on approved temporary mailbox assemblies during relocation. Maintain mailbox assemblies in a serviceable condition. Furnish and install additional mailbox assemblies as directed. Relocate mailbox assemblies to permanent locations upon completion of construction work.

560.4. Measurement. This Item will be measured by each mailbox assembly installed.

560.5. Payment. The work performed and materials furnished in accordance with this Item and measured as provided under "Measurement" will be paid for at the unit price bid for "Mailbox Installation (Single)," "Mailbox Installation (Double)," or "Mailbox Installation (Multiple)."

This price is full compensation for installing mailboxes and reflectors in permanent locations, materials, equipment, labor, tools, and incidentals. Removing existing and temporary mailbox assemblies and installing and moving temporary mailbox assemblies will not be paid for directly, but will be subsidiary to pertinent Items.

ITEM 618
CONDUIT

618.1. Description. Furnish and place conduit.

618.2. Materials. Provide new materials that comply with the details shown on the plans, the requirements of this Item, and the pertinent requirements of Item 622, "Duct Cable."

When specified in the plans, provide:

- rigid metal (RM) conduit that is hot-dip galvanized inside and outside with a minimum of 1.5 oz. per square foot of a zinc coating in accordance with Item 445, "Galvanizing";
- electrical metallic tubing (EMT) and intermediate metal conduit (IMC) that is steel, galvanized on the outside, and protected on the inside with a suitable corrosion-resistant material;
- polyvinyl chloride (PVC) conduit that meets the requirements of NEMA Standard TC-2, UL 651, and the NEC;
- high-density polyethylene (HDPE) conduit without factory-installed conductors that meets the requirements of Item 622, "Duct Cable"; or
- flexible conduit that is liquid-tight.

Furnish conduit from new materials that comply with DMS-11030, "Conduit."

Provide conduit from manufacturers prequalified by the Department. The Traffic Operations Division maintains a list of prequalified electrical conduit manufacturers.

Unless otherwise shown on the plans, fabricate fittings such as junction boxes and expansion joints from a material similar to the connecting conduit. Use watertight fittings. Do not use set screw and pressure-cast fittings. Steel compression fittings are permissible. When using HDPE conduit, provide fittings that are UL-listed as electrical conduit connectors or thermally fused using an electrically heated wound wire resistance welding method.

Use red 3-in. 4-mil polyethylene underground warning tape that continuously states "Caution Buried Electrical Line Below."

618.3. Construction. Place conduit in accordance with the lines, grades, details, and dimensions shown on the plans or as directed. Install conduit a minimum of 18 in. deep underground unless otherwise shown on the plans. Meet the requirements of the NEC when installing conduit. Secure and support conduit placed for concrete encasement in such a manner that the alignment will not be disturbed during placement of the concrete. Cap ends of conduit and close box openings before concrete is placed.

Ream conduit to remove burrs and sharp edges. Use a standard conduit cutting die with a 3/4-in. taper per foot when conduit is threaded in the field. Fasten conduit placed on structures with conduit straps or hangers as shown on the plans or as directed. Fasten conduit within 3 ft. of each box or fitting and at other locations shown on the plans or as directed. Use metal conduit clamps that are galvanized malleable or stainless steel unless

otherwise shown on the plans. Use 2-hole type clamps for 2-in. diameter or larger conduit.

Fit PVC and HDPE conduit terminations with bushings or bell ends. Fit metal conduit terminations with a grounding type bushing, except conduit used for duct cable casing that does not terminate in a ground box and is not exposed at any point. Conduit terminating in threaded bossed fittings does not need a bushing. Prior to installation of conductors or final acceptance, pull a spherical template having a diameter of at least 75% of the inside diameter of the conduit through the conduit to ensure that the conduit is free from obstruction. Cap or plug empty conduit placed for future use.

Perform trench excavation and backfilling as shown on the plans or as directed and in accordance with Item 400, “Excavation and Backfill for Structures.” Excavation and backfilling will be subsidiary to the installation of the conduit.

Jack and bore as shown on the plans or as directed, and in accordance with Item 476, “Jacking, Boring, or Tunneling Pipe.”

Place warning tape approximately 10 in. above trenched conduit. Where existing surfacing is removed for placing conduit, repair by backfilling with material equal in composition and density to the surrounding areas and by replacing any removed surfacing, such as asphalt pavement or concrete riprap, with like material to equivalent condition. Mark conduit locations as directed.

618.4. Measurement. This Item will be measured by the foot of conduit.

This is a plans quantity measurement Item. The quantity to be paid is the quantity shown in the proposal, unless modified by Article 9.2, “Plans Quantity Measurement.” Additional measurements or calculations will be made if adjustments of quantities are required.

618.5. Payment. The work performed and materials furnished in accordance with this Item and measured as provided under “Measurement” will be paid for at the unit price bid for “Conduit” of the type and size specified and the installation method specified as applicable. This price is full compensation for furnishing and installing conduit; hanging, strapping, jacking, boring, tunneling, excavating, and furnishing and placing backfill; replacing pavement structure, sod, riprap, curbs, or other surface; marking location of conduit (when required); furnishing and installing fittings, junction boxes, and expansion joints; and equipment, labor, tools and incidentals.

Flexible conduit will not be paid for directly but will be subsidiary to pertinent Items. Unless otherwise shown on the plans, no payment will be allowed under this Item for conduit used on electrical services or in foundations.

ITEM 634
PLYWOOD SIGNS

634.1. Description.

- **Installation.** Furnish, fabricate, and erect plywood signs. Sign supports are provided for under other items.
- **Replacement.** Replace existing signs on existing sign supports.
- **Refurbishing.** Refurbish existing plywood signs on existing sign supports.

634.2. Materials.

A. Sign Blanks. Furnish sign blank substrates in accordance with DMS-7100, "Plywood Sign Blanks." Use sign blanks of single panel or multi-panel construction. Unless otherwise shown on the plans, use plywood sheets of 5/8-in. thickness.

B. Sign Face Reflectorization. Reflectorize the sign faces with flat surface reflective sheeting. Furnish sheeting that meets DMS-8300, "Sign Face Materials." Use reflective sheeting from the same manufacturer for the entire face of a sign.

C. Sign Messages. Fabricate sign messages to the sizes, types, and colors shown on the plans. Use sign message material from the same manufacturer for the entire message of a sign.

- Ensure that the screened messages have clean, sharp edges and exhibit uniform color and reflectivity. Prevent runs, sags, and voids. Furnish screen inks in accordance with DMS-8300.
- Fabricate colored, transparent film legend and reflectorized sheeting legend from materials that meet DMS-8300.
- Fabricate nonreflectorized-sheeting legend from materials that meet DMS-8300.
- Furnish Type A aluminum signs required as part of a message in conformance with the plans and in accordance with Item 636, "Aluminum Signs."

D. Hardware. Use galvanized steel, stainless steel, or dichromate-sealed aluminum for bolts, nuts, washers, lock washers, screws, and other sign assembly hardware. Use plastic or nylon washers to avoid tearing the reflective sheeting. Furnish steel or aluminum products in accordance with DMS-7120, "Sign Hardware."

When dissimilar metals are used, select or insulate metals to prevent corrosion.

E. Sampling. The Engineer will sample in accordance with Tex-726-I.

634.3. Construction.

A. Fabrication.

1. **Sign Blanks.** Furnish sign blanks to the sizes and shapes shown on the plans. Do not use panels with a face dimension of less than 18 in. for multi-panel signs unless otherwise shown on the plans. Use 1-piece construction for 4-ft. by 8-ft. or smaller signs.

   Sign face surface variation must not exceed 1/8 in. per foot. Surface misalignment between panels in multi-panel signs must not exceed 1/16 in. at any point. Gaps between panels must not exceed 1/8 in.

Paint all edges of the sign blank, including interior edges of multi-panel signs, with a white exterior, 100% acrylic latex paint. Any commercial brand of paint may be used. Ensure that the paint does not interfere with the sheeting/substrate interface or leave any marking on the sheeting face.

2. **Sheeting Application.** Apply sheeting to sign blanks in conformance with the recommended procedures of the sheeting manufacturer. For multi-panel signs, carefully match the reflective sheeting on adjacent panels to provide uniform color, appearance, and reflectivity.

   Minimize the number of splices in the sheeting. Overlap the lap-splices by at least 1/4 in. Use butt splices for Type D and Type E reflective sheeting. Provide a 1-ft. minimum dimension for any piece of sheeting. Do not splice sheeting for signs fabricated with transparent screen inks or colored transparent films.

3. **Decals.** Code and apply sign identification decals in accordance with Item 643, "Sign Identification Decals."

B. Storage and Handling. Ship, handle, and store completed sign blanks and completed signs so that corners, edges, and faces are not damaged. Damage to the sign face that is not visible when viewed at a distance of 50 ft., night or day, will be acceptable. Replace unacceptable signs.

Store all finished signs off the ground and in a vertical position until erected. Store finished signs 60 in. by 60 in. or smaller in a weatherproof building. Larger signs may be stored outside.

C. Cleaning. Before shop inspection, wash completed signs with a biodegradable cleaning solution acceptable to the manufacturers of the sheeting, colored transparent film, and screen ink to remove grease, oil, dirt, smears, streaks, finger marks, and other foreign material. Wash again before final inspection after erection.

D. Installation. Install signs as shown on the plans or as directed.

E. Replacement. Remove the existing signs from the existing supports and replace with new signs, including mounting hardware, as shown on the plans.

F. Refurbishing. Refurbish existing signs by providing and installing new messages and mounting hardware. Install new reflectorized legend and supplemental signs as shown on the plans.

G. Unsalvageable Material. Accept ownership of unsalvageable materials and dispose of in accordance with federal, state, and local regulations.

634.4. Measurement. Signs installed or replaced will be measured by the square foot of the sign face. Signs refurbished will be measured by each sign.

This is a plans quantity measurement Item. The quantity to be paid is the quantity shown in the proposal, unless modified by Article 9.2, "Plans Quantity Measurement." Additional measurements or calculations will be made if adjustments of quantities are required.

634.5. Payment. The work performed and materials furnished in accordance with this Item and measured as provided under "Measurement" will be paid for at the unit price

bid for “Plywood Signs,” “Replacing Existing Plywood Signs,” or “Refurbishing Plywood Signs.”

A. Installation. This price is full compensation for furnishing and installing new signs and hardware; fabrication of sign panels; treatment of sign panels required before application of the background materials; application of the background materials and messages to the sign panels; furnishing and fabricating frames, wind beams, stiffeners, or required joint backing strips; furnishing bolts, rivets, screws, fasteners, clamps, brackets, and sign support connections; assembling and erecting the signs; preparing and cleaning the signs; and equipment, materials, labor, tools, and incidentals.

B. Replacement. This price is full compensation for furnishing and installing new plywood signs and hardware; removal of existing signs; fabrication of sign panels; treatment of sign panels required before application of the background materials; application of the background materials and messages to the sign panels; furnishing and fabricating frames, wind beams, stiffeners, or required joint backing strips; furnishing bolts, rivets, screws, fasteners, clamps, brackets, and sign support connections; assembling and erecting the signs; preparing and cleaning the signs; salvaging and disposal of unsalvageable material; and equipment, materials, labor, tools, and incidentals.

C. Refurbishing. This price is full compensation for modifying existing sign messages; removing and replacing existing route markers, reflectorized legend, or supplemental signs attached to the parent sign; preparing and cleaning the signs; furnishing sheeting and hardware; salvaging and disposal of unsalvageable material; and equipment, materials, labor, tools, and incidentals.

ITEM 636
ALUMINUM SIGNS

636.1. Description.

- **Installation.** Furnish, fabricate, and erect aluminum signs. Sign supports are provided for under other Items.
- **Replacement.** Replace existing signs on existing sign supports.
- **Refurbishing.** Refurbish existing aluminum signs on existing sign supports.

636.2. Materials.

A. Sign Blanks. Furnish sign blank substrates in accordance with DMS-7110, "Aluminum Sign Blanks," and in accordance with the types shown on the plans. Use single-piece sheet-aluminum substrates for Type A (small) signs and extruded aluminum substrates for Type G (ground-mounted) or Type O (overhead-mounted) signs.

B. Sign Face Reflectorization. Reflectorize the sign faces with flat surface reflective sheeting. Furnish sheeting that meets DMS-8300, "Sign Face Materials." Use reflective sheeting from the same manufacturer for the entire face of a sign.

C. Sign Messages. Fabricate sign messages to the sizes, types, and colors shown on the plans. Use sign message material from the same manufacturer for the entire message of a sign.

- Ensure that the screened messages have clean, sharp edges and exhibit uniform color and reflectivity. Prevent runs, sags, and voids. Furnish screen inks in accordance with DMS-8300.
- Fabricate colored, transparent film legend and reflectorized sheeting legend from materials that meet DMS-8300.
- Fabricate nonreflectorized-sheeting legend from materials that meet DMS-8300.
- Furnish Type A aluminum signs required as part of a message in conformance with the plans and in accordance with this Item.

D. Hardware. Use galvanized steel, stainless steel, or dichromate-sealed aluminum for bolts, nuts, washers, lock washers, screws, and other sign assembly hardware. Use plastic or nylon washers to avoid tearing the reflective sheeting. Furnish steel or aluminum products in accordance with DMS-7120, "Sign Hardware."

When dissimilar metals are used, select or insulate metals to prevent corrosion.

E. Sampling. The Engineer will sample in accordance with Tex-726-I.

636.3. Construction.

A. Fabrication.

1. **Sign Blanks.** Furnish sign blanks to the sizes and shapes shown on the plans and that are free of buckles, warps, burrs, dents, cockles, or other defects. Do not splice individual extruded aluminum panel.

   Complete the fabrication of sign blanks, including the cutting and drilling or punching of holes, before cleaning and degreasing. After cleaning and degreasing,

ensure that the substrate does not come into contact with grease, oils, or other contaminants before the application of the reflective sheeting.

2. **Sheeting Application.** Apply sheeting to sign blanks in conformance with the recommended procedures of the sheeting manufacturer. Clean and prepare the outside surface of extruded aluminum flanges in the same manner as the sign panel face.

   Minimize the number of splices in the sheeting. Overlap the lap-splices by at least 1/4 in. Use butt splices for Type D and Type E reflective sheeting. Provide a 1-ft. minimum dimension for any piece of sheeting. Do not splice sheeting for signs fabricated with transparent screen inks or colored transparent films.

3. **Sign Assembly.** Assemble extruded aluminum signs in accordance with the details shown on the plans. Sign face surface variation must not exceed 1/8 in. per foot. Surface misalignment between panels in multi-panel signs must not exceed 1/16 in. at any point.

4. **Decals.** Code and apply sign identification decals in accordance with Item 643, "Sign Identification Decals."

B. Storage and Handling. Ship, handle, and store completed sign blanks and completed signs so that corners, edges, and faces are not damaged. Damage to the sign face that is not visible when viewed at a distance of 50 ft., night or day, will be acceptable. Replace unacceptable signs.

Store all finished signs off the ground and in a vertical position until erected. Store finished signs 60 in. by 60 in. or smaller in a weatherproof building. Larger signs may be stored outside.

C. Cleaning. Before shop inspection, wash completed signs with a biodegradable cleaning solution acceptable to the manufacturers of the sheeting, colored transparent film, and screen ink to remove grease, oil, dirt, smears, streaks, finger marks, and other foreign material. Wash again before final inspection after erection.

D. Installation. Install signs as shown on the plans or as directed.

E. Replacement. Remove the existing signs from the existing supports and replace with new signs, including mounting hardware, as shown on the plans.

F. Refurbishing. Refurbish existing signs by providing and installing new messages and mounting hardware. Install new reflectorized legend and supplemental signs as shown on the plans.

G. Unsalvageable Material. Accept ownership of unsalvageable materials and dispose of in accordance with federal, state, and local regulations.

636.4. Measurement. Signs installed or replaced will be measured by the square foot of the sign face. Signs refurbished will be measured by each sign.

This is a plans quantity measurement Item. The quantity to be paid is the quantity shown in the proposal, unless modified by Article 9.2, "Plans Quantity Measurement." Additional measurements or calculations will be made if adjustments of quantities are required.

636.5. Payment. The work performed and materials furnished in accordance with this Item and measured as provided under "Measurement" will be paid for at the unit price bid for "Aluminum Signs," "Replacing Existing Aluminum Signs," or "Refurbishing Aluminum Signs," of the type specified.

A. Installation. This price is full compensation for furnishing and installing new signs and hardware; fabrication of sign panels; treatment of sign panels required before application of the background materials; application of the background materials and messages to the sign panels; furnishing and fabricating frames, wind beams, stiffeners, or required joint backing strips; furnishing bolts, rivets, screws, fasteners, clamps, brackets, and sign support connections; assembling and erecting the signs; preparing and cleaning the signs; and equipment, materials, labor, tools, and incidentals.

B. Replacement. This price is full compensation for furnishing and installing new aluminum signs and hardware; removal of existing signs; fabrication of sign panels; treatment of sign panels required before application of the background materials; application of the background materials and messages to the sign panels; furnishing and fabricating frames, wind beams, stiffeners, or required joint backing strips; furnishing bolts, rivets, screws, fasteners, clamps, brackets, and sign support connections; assembling and erecting the signs; preparing and cleaning the signs; salvaging and disposing of unsalvageable material; and equipment, materials, labor, tools, and incidentals.

C. Refurbishing. This price is full compensation for modifying existing sign messages; removing and replacing existing route markers, reflectorized legend, or supplemental signs attached to the parent sign; preparing and cleaning the signs; furnishing sheeting and hardware; salvaging and disposing of unsalvageable material; and equipment, materials, labor, tools, and incidentals.

ITEM 643

SIGN IDENTIFICATION DECALS

643.1. Description. Furnish and install sign identification decals.

643.2. Materials. Meet the requirements of DMS-8315, "Sign Identification Decals."

Figure 1 shows the sign identification decal design. Table 1 describes the information required in each row of the decal.

TxDOT												
C	Fabrication										T	1
J	F	M	A	M	J	J	A	S	O	N	D	2
	200		201		202		203		204			3
	0	1	2	3	4	5	6	7	8	9		4
Sheeting MFR – Substrate												
A	B	C	D	E	F	G	H	J	K	L	M	5a
Sheeting MFR – Legend												
A	B	C	D	E	F	G	H	J	K	L	M	5b
Installation Date												
				0	1	2	3					6
	0	1	2	3	4	5	6	7	8	9		7
J	F	M	A	M	J	J	A	S	O	N	D	8
	200		201		202		203		204			9
	0	1	2	3	4	5	6	7	8	9		10

Figure 1
Decal Design (row numbers explained in Table 1).

Table 1
Decal Description

Row	Explanation
1 -	Sign Fabricator
2 -	Month Fabricated
3 -	First 3 Digits of Year Fabricated
4 -	Last Digit of Year Fabricated
5a -	Sheeting Manufacturer - substrate
5b -	Sheeting Manufacturer - legend
6 -	Tens Digit of Date Installed
7 -	Ones Digit of Date Installed
8 -	Month Installed
9 -	First 3 Digits of Year Installed
10 -	Last Digit of Year Installed

643.3. Construction.

A. Sign Fabricator. Code the decal by punching out the following:

- "C" if fabricated by a commercial sign fabricator or "T" if fabricated by the Texas Department of Criminal Justice,
- month fabricated,
- first 3 digits of the year fabricated,
- fourth digit of the year fabricated, and
- sheeting manufacturer (codes for the sheeting manufacturers are located in the Department's approved Material Producer List, "Sign Face Materials."

Affix decal to lower left corner of the sign back in an upright position.

B. Contractor. Code decal by scratching out the sign installation effective date as follows:

- first digit of the day,
- second digit of the day,
- month,
- first 3 digits of the year, and
- fourth digit of the year.

643.4. Measurement and Payment. The work performed, materials furnished, equipment, labor, tools, and incidentals will not be measured or paid for directly, but will be subsidiary to pertinent Items.

ITEM 644

SMALL ROADSIDE SIGN SUPPORTS AND ASSEMBLIES

644.1. Description.

- **Installation.** Furnish, fabricate, and erect small roadside sign assemblies consisting of the signs, sign supports, foundations, and associated mounting hardware.
- **Relocation.** Relocate existing small roadside sign assemblies, and furnish and fabricate materials as required.
- **Removal.** Remove existing small roadside sign assemblies.

644.2. Materials. Furnish all materials unless otherwise shown on the plans. Furnish only new materials. Furnish and fabricate materials in accordance with the following Items and with details shown on the plans:

- Item 421, "Hydraulic Cement Concrete"
- Item 440, "Reinforcing Steel"
- Item 441, "Steel Structures"
- Item 442, "Metal for Structures"
- Item 445, "Galvanizing"
- Item 634, "Plywood Signs"
- Item 636, "Aluminum Signs"
- Item 643, "Sign Identification Decals"
- Item 656, "Foundations for Traffic Control Devices."

Use galvanized steel, stainless steel, dichromate sealed aluminum, or other materials shown on the plans for pipe, bolts, nuts, washers, lock washers, screws, and other sign assembly hardware. When dissimilar metals are used, select or insulate the metals to prevent corrosion.

644.3. Construction. Install foundations in accordance with Item 656, "Foundations for Traffic Control Devices." Plumb sign supports. Do not spring or rake posts to secure proper alignment. Use established safety practices when working near underground or overhead utilities. Consult the appropriate utility company before beginning work.

A. Fabrication. Fabricate sign supports in accordance with Item 441, "Steel Structures." Ensure that all components fit properly.

Verify the length of each post for each sign before fabrication to meet field conditions and sign-mounting heights shown on the plans.

Galvanize fabricated parts in accordance with Item 445, "Galvanizing." Punch or drill any holes in steel parts or members before the parts or members are galvanized. Repair any steel part or member on which the galvanizing has been damaged during assembly, transit, erection, or welding in accordance with Section 445.3.D, "Repairs."

B. Installation. Locate sign supports as shown on the plans, unless directed to shift the sign supports within design guidelines to secure a more desirable location or to avoid conflict with utilities and underground appurtenances. Stake sign-support locations for verification by the Engineer.

Install stub posts of the type, spacing, orientation, and projection shown on the plans. Remove and replace posts damaged during installation at the Contractor's expense.

Connect the upper post sections to the stub post sections as shown on the plans. Torque connection bolts as shown on the plans.

Attach signs to support assemblies in accordance with the plans and pertinent Items.

C. Relocation. Unless otherwise shown on the plans, reuse the existing supports and shorten or lengthen them as required. Obtain approval before lengthening existing supports. Furnish and install new breakaway stub posts in new foundations for relocated signs. Erect the supports on the new breakaway stub posts, and attach the signs to the supports. Attach signs to support assemblies in accordance with the plans and pertinent Items. Remove existing foundations to be abandoned in accordance with Section 644.3.D, "Removal."

D. Removal. Remove existing concrete foundations that are to be abandoned to 2 ft. below finish grade. Backfill the remaining hole with material equal in composition and density to the surrounding area. Replace any surfacing with like material to equivalent condition.

E. Handling and Storage. Handle and store existing signs or portions of signs removed so that they are not damaged. Prevent any damage to the various sign assembly components. Replace any portion of the sign damaged by the Contractor designated for reuse or salvage, including messages removed.

Stockpile all removed sign components that will be reused or that become the property of the Department at designated locations. Accept ownership of unsalvageable materials, and dispose of them in accordance with federal, state, and local regulations.

F. Cleaning. After the sign has been installed, wash the entire sign with a biodegradable cleaning solution acceptable to the sheeting and screen ink manufacturers to remove dirt, grease, oil smears, streaks, finger marks, and other foreign materials.

644.4. Measurement. This Item will be measured as each small roadside assembly installed, removed, or relocated.

644.5. Payment. The work performed and materials furnished in accordance with this Item and measured as provided under "Measurement" will be paid for at the unit price bid for "Install Small Roadside Sign Supports and Assemblies" of the type specified, "Relocate Small Roadside Sign Supports and Assemblies" of the type specified, or "Remove Small Roadside Sign Supports and Assemblies."

A. Installation. This price is full compensation for furnishing, fabricating, galvanizing, and erecting the supports; constructing foundations including concrete (when required); furnishing complete signs including sign connections and all hardware; attaching the signs to the supports; washing and cleaning the signs; and equipment, materials, labor, tools, and incidentals.

B. Relocation. This price is full compensation for furnishing and installing new breakaway stubs and new sign supports (when required); constructing foundations including concrete (when required); removing existing signs and related materials;

new signs (when required); modifying existing sign supports; reinstallation of signs and sign assemblies; preparing and cleaning; salvaging; disposal of unsalvageable material; hauling, excavating, backfilling, and surface placement; new hardware; and equipment, materials, labor, tools, and incidentals.

C. Removal. This price is full compensation for removing existing sign assemblies and related materials; salvaging; disposal of unsalvageable material; hauling, excavating, backfilling, and surface placement; and equipment, materials, labor, tools, and incidentals.

ITEM 656

FOUNDATIONS FOR TRAFFIC CONTROL DEVICES

656.1. Description. Construct concrete foundations for small roadside signs, traffic signal controllers, pedestal poles, roadside flashing beacon assemblies, and other small traffic control devices.

656.2. Materials. Ensure materials and construction methods conform to the requirements of this Item and the pertinent requirements of the following Items:

- Item 400, “Excavation and Backfill for Structures”
- Item 416, “Drilled Shaft Foundations”
- Item 420, “Concrete Structures”
- Item 421, “Hydraulic Cement Concrete”
- Item 432, “Riprap”
- Item 440, “Reinforcing Steel”
- Item 441, “Steel Structures”
- Item 442, “Metal for Structures”
- Item 445, “Galvanizing”
- Item 447, “Structural Bolting”
- Item 449, “Anchor Bolts”
- Item 618, “Conduit.”

Use Class A concrete for nonreinforced drilled shafts. Use Class C concrete for reinforced drilled shafts. Use Class B concrete or polymer concrete composed of borosilicate glass fiber, catalyzed polyester resin, and aggregate for traffic signal controller foundations. Use drilled shaft or galvanized steel screw-in type foundations for roadside flashing beacon assemblies.

Use reinforcing steel when required.

656.3. Construction. Stake and install foundations as shown on the plans. The Department may shift the foundation locations within design guidelines where necessary to secure a more desirable location or to avoid conflict with utilities. Use established industry and utility safety practices when working near underground or overhead utilities. Consult the appropriate utility prior to beginning work.

Hold anchor bolts in place with templates during concrete placement. Hold embedded items such as conduit or other hardware in place during concrete placement with templates or other approved means. Cap conduits before placing concrete. Ream conduit to remove burrs and sharp edges. Install bell ends or bushings on the conduit.

Carefully align foundation, posts, and anchor bolts. Do not spring or rake posts or anchor bolts.

Remove the top template after concrete has achieved initial set. Keep forms and other bracing intact until the concrete has cured at least one curing day.

Allow concrete for pedestal poles and roadside flashing beacon assemblies to cure at least 7 days before placing bases and poles on the foundation unless otherwise permitted in writing.

Allow concrete for traffic signal controller foundations and small roadside signs to cure at least 4 days before placing cabinets and posts on the foundation unless otherwise permitted.

Provide an ordinary surface finish to the concrete foundation extending above ground in accordance with Section 420.4.M, “Ordinary Surface Finish.”

Place concrete riprap around the foundation in accordance with the plans.

Backfill disturbed surface with material equal in composition and density to the surrounding area. Replace surfacing material with similar material to an equivalent condition.

656.4. Measurement and Payment. The work performed, materials furnished, equipment, labor, tools, and incidentals will not be measured or paid for directly, but will be subsidiary to pertinent Items.

ITEM 662

WORK ZONE PAVEMENT MARKINGS

662.1. Description. Furnish, place, and maintain work zone pavement markings.

662.2. Materials. Provide thermoplastic, paint and beads, raised pavement markers, prefabricated pavement markings, temporary flexible reflective roadway marker tabs, or other approved materials for work zone pavement markings. Purchase all pavement marking materials on the open market.

Supply materials meeting:

- DMS-4200, "Pavement Markers (Reflectorized),"
- DMS-4300, "Traffic Buttons,"
- DMS-8240, "Permanent Prefabricated Pavement Markings,"
- DMS-8241, "Removable Prefabricated Pavement Markings,"
- DMS-8242, "Temporary Flexible-Reflective Road Marker Tabs,"
- DMS-8200, "Traffic Paint,"
- DMS-8220, "Hot Applied Thermoplastic," and
- DMS-8290, "Glass Traffic Beads."

A. Nonremovable Markings. Use hot-applied thermoplastic or permanent prefabricated pavement markings for nonremovable markings. Paint and beads or other materials are not allowed for nonremovable markings unless shown on the plans.

B. Removable and Short-Term Markings. Use raised pavement markers, removable prefabricated pavement markings, temporary flexible reflective roadway marker tabs, or other approved materials for removable and short-term markings. Do not use hot-applied thermoplastic or traffic paint for removable markings. Use removable prefabricated pavement markings on the final pavement surface when the plans specify removable markings.

662.3. Construction. Apply pavement markings in accordance with the following Items:

- Item 666, "Reflectorized Pavement Markings"
- Item 668, "Prefabricated Pavement Markings"
- Item 672, "Raised Pavement Markers."

A. Placement. Install longitudinal markings on pavement surfaces before opening to traffic. Maintain lane alignment traffic control devices and operations until markings are installed. Install markings in proper alignment in accordance with the TMUTCD and as shown on the plans. Short-term markings will be allowed when standard markings (removable or nonremovable) cannot be placed before opening to traffic, if shown on the plans or directed.

When short-term markings are allowed for opening to traffic, place longitudinal standard markings no later than 14 calendar days after the placement of the surface. When inclement weather prohibits placement of markings, the 14-day period may be extended until weather permits proper application.

Place standard longitudinal markings no sooner than 3 calendar days after the placement of a surface treatment, unless otherwise shown on the plans.

Apply thermoplastic markings to a minimum thickness of 0.060 in. (60 mils). When paint and beads are allowed, apply to a minimum dry thickness of 0.012 in. (12 mils).

Place short-term markings in proper alignment with the location of the final pavement markings. Remove and replace short-term markings not in alignment at the Contractor's expense.

For removable placements, use of raised pavement markers to simulate longitudinal markings is at the Contractor's option. Use side-by-side raised pavement markers to simulate longitudinal lines wider than 4 in. Do not use raised pavement markers for words, symbols, shapes, or diagonal or transverse lines.

B. Marking Removal. Remove markings that conflict with succeeding markings in accordance with Item 677, "Eliminating Existing Pavement Markings and Markers." Remove short-term markings that interfere or conflict with final marking placement immediately before placing final pavement markings, unless otherwise directed. Remove the remainder of the short-term markings before final acceptance.

Leave as little evidence as possible of the marking when removing marking materials.

C. Performance Requirements. All markings must be visible from a distance of at least 300 ft. in daylight conditions and from a distance of at least 160 ft. in nighttime conditions, illuminated by automobile low-beam headlight. Determine visibility distances using an automobile traveling on the roadway under dry conditions.

Maintain the markings for 30 calendar days after installation. The end of the 30-day maintenance period does not relieve the contractor from the performance deficiencies requiring corrective action identified during the 30-day period. If markings fail to meet the requirements of this Item during the 30-day period, remove and replace them at the Contractor's expense. The 30-calendar day performance requirement will begin again after replacement of the markings.

The daytime and nighttime reflected color of the markings must be distinctly white or yellow. The markings must exhibit uniform retroreflective characteristics.

662.4. Measurement. This Item will be measured by the foot or by each word, shape, symbol, or temporary flexible reflective roadway marker tab. Each stripe will be measured separately. Raised pavement markers used to simulate a marking will be measured by the foot of marking or by each raised pavement marker.

This is a plans quantity measurement Item. The quantity to be paid is the quantity shown in the proposal, unless modified by Article 9.2, "Plans Quantity Measurement." Additional measurements or calculations will be made if adjustments of quantities are required.

662.5. Payment. The work performed and materials furnished in accordance with this Item and measured as provided under "Measurement" will be paid for at the unit price bid for "Work Zone Pavement Markings" of the type and color specified and the shape, width, and size specified as applicable. This price is full compensation for furnishing,

placing, maintaining, and removing work zone pavement markings and for materials, equipment, labor, tools, and incidentals.

Elimination of nonremovable markings will be paid for under Item 677, “Eliminating Existing Pavement Markings and Markers.” Removal of short-term and removable markings will not be paid for directly, but will be subsidiary to this Item.

Type II work zone pavement markings (paint and beads) used as a sealer for Type I pavement markings (thermoplastic) will be paid for under this Item.

ITEM 666

REFLECTORIZED PAVEMENT MARKINGS

666.1. Description. Furnish and place reflectorized pavement markings.

666.2. Materials.

A. Type I Marking Materials. Furnish in accordance with DMS-8220, "Hot Applied Thermoplastic."

B. Type II Marking Materials. Furnish in accordance with DMS-8200, "Traffic Paint."

C. Glass Traffic Beads. Furnish drop-on glass beads conforming to DMS-8290, "Glass Traffic Beads."

1. **Type I Markings.** Furnish Type III drop-on glass beads. Furnish Type II or double-drop of Type II and Type III drop-on glass beads where each type bead is applied separately in equal portions (by weight), only when specified in the plans. When furnishing a double-drop system, apply the Type III beads before applying the Type II beads.
2. **Type II Markings.** Furnish Type III drop-on glass beads or other beads specified on the plans.

D. Labeling. Use clearly marked containers that indicate color, mass, material type, manufacturer, and batch number.

666.3. Equipment.

A. General Requirements. Use equipment that:

- is maintained in satisfactory condition,
- meets or exceeds the requirements of the National Board of Fire Underwriters and the RRC for this application,
- uses an automatic bead dispenser attached to the pavement marking equipment, and
- can provide continuous mixing and agitation of the pavement marking material.

Provide a hand-held thermometer capable of measuring the temperature of the marking material when applying Type I material.

B. Material Placement Requirements. Use equipment that can place:

- at least 40,000 ft. of 4-in. solid or broken markings per day at the specified thickness;
- linear markings up to 8 in. wide in a single pass;
- markings other than solid or broken lines;
- a center-line and no-passing barrier-line configuration consisting of 1 broken line with 2 solid lines at the same time to the alignment, spacing, and thickness shown on the plans, for 3-line application;
- white line from both sides;
- lines with clean edges, uniform cross section and thickness, and reasonably square ends;

- skip lines between 10 and 10-1/2 ft., an approximate stripe-to-gap ratio of 1 to 3, and a stripe-gap cycle between 39-1/2 ft. and 40-1/2 ft., automatically;
- beads uniformly and almost instantly on the marking as the marking is being applied;
- beads uniformly during the application of all lines (each line must have an equivalent bead yield rate and embedment); and
- double-drop bead applications using both Type II and Type III beads from separate independent bead applicators, if double-drop bead application is used.

666.4. Construction. Place markings before opening to traffic unless short-term or work zone markings are allowed.

A. General. Obtain approval for the sequence of work and estimated daily production. On roadways already open to traffic, place markings with minimal interference to the operations of that roadway. Use traffic control as shown on the plans or as approved. Protect all markings placed under open-traffic conditions from traffic damage and disfigurement.

Establish guides to mark the lateral location of pavement markings as shown on the plans or as directed, and have guide locations verified. Use material for guides that will not leave a permanent mark on the roadway.

Apply markings on pavement that is completely dry and passes the following tests:

- Type I Marking Application—Place a sample of Type I marking material on a piece of tarpaper placed on the pavement. Allow the material to cool to ambient temperature, and then inspect the underside of the tarpaper in contact with the pavement. Pavement will be considered dry if there is no condensation on the tarpaper.
- Type II Marking Application—Place a 1-sq. ft. piece of clear plastic on the pavement, and weight down the edges. The pavement is considered dry if, when inspected after 15 min., no condensation has occurred on the underside of the plastic.

Apply markings:

- that meet the requirements of Tex-828-B,
- using widths and colors shown on the plans,
- at locations shown on the plans,
- in proper alignment with the guides without deviating from the alignment more than 1 in. per 200 ft. of roadway or more than 2 in. maximum,
- without abrupt deviations,
- free of blisters and with no more than 5% by area of holes or voids,
- with uniform cross section and thickness,
- with clean and reasonably square ends,
- that are reflectorized, and
- using personnel skilled and experienced with installation of pavement markings.

Remove all applied markings that are not in alignment or sequence as stated in the plans or as stated in the specifications at the Contractor’s expense in accordance with

Item 677, “Eliminating Existing Pavement Markings and Markers,” except for measurement and payment.

B. Surface Preparation. Unless otherwise shown on the plans, prepare surfaces in accordance with this section.

1. **Cleaning for New Asphalt Surfaces and Retracing of All Surfaces.** For new asphalt surfaces (less than 3 years old) and retracing of all surfaces, air-blast or broom the pavement surface to remove loose material, unless otherwise shown on the plans. A sealer for Type I markings is not required unless otherwise shown on the plans.
2. **Cleaning for Old Asphalt and Concrete Surfaces (Excludes Retracing).** For old asphalt surfaces (more than 3 years old) and all concrete surfaces, clean in accordance with Item 678, “Pavement Surface Preparation for Markings,” to remove curing membrane, dirt, grease, loose and flaking existing construction markings, and other forms of contamination.
3. **Sealer for Type I Markings.** For asphalt surfaces more than 3 years old or for concrete, apply a pavement sealer before placing Type I markings on locations that do not have existing markings, unless otherwise approved. The pavement sealer may be either a Type II marking or an acrylic or epoxy sealer unless otherwise shown on the plans. Follow the manufacturer’s directions for application of acrylic or epoxy sealers. When the sealer becomes dirty after placement, clean by washing or in accordance with Section 666.4.B.1, “Cleaning for New Asphalt Surfaces and Retracing of All Surfaces,” as directed. Place the sealer in the same configuration and color (unless clear) as the Type I markings unless otherwise shown on the plans.

C. Application. Apply markings during good weather unless otherwise directed. If markings are placed at Contractor option when inclement weather is impending and the markings are damaged by subsequent precipitation, the Contractor is responsible for all costs associated with replacing the markings if required.

1. **Type I Markings.** Place the Type I marking after the sealer cures. Apply within the temperature limits recommended by the material manufacturer. If during a spray application, operations cease for 5 min. or longer, flush the spray head by spraying marking material into a pan or similar container until the material being applied is at the recommended temperature.

   Apply on clean, dry pavements passing the moisture test described in Section 666.4.A, “General,” and with a surface temperature above 50ºF when measured in accordance with Tex-829-B.

   Apply Type I markings with a minimum thickness of:
   - 0.100 in. (100 mils) for new markings and retracing water-based markings on surface treatments involving Item 316, “Surface Treatments,” or Item 318, “Hot Asphalt-Rubber Surface Treatments,”
   - 0.060 in. (60 mils) for retracing on thermoplastic pavement markings, or
   - 0.090 in. (90 mils) for all other Type I markings.

   The maximum thickness for Type I markings is 0.180 in. (180 mils). Measure thickness for markings in accordance with Tex-854-B using the tape method.

2. **Type II Markings.** Apply on surfaces with a minimum surface temperature of 50°F. Apply at least 20 gal. per mile on concrete and asphalt surfaces and at least 22 gal. per mile on surface treatments for a solid 4-in. line. Adjust application rates proportionally for other widths. When Type II markings are used as a sealer for Type I markings, apply at least 15 gal. per mile using Type II drop-on beads.
3. **Bead Coverage.** For Type I and Type II markings, provide a uniform distribution of beads across the surface of the stripe, with 40 to 60% bead embedment.

D. **Performance Period.** All markings and replacement markings must meet the requirements of Tex-828-B for at least 30 calendar days after installation. Unless otherwise directed, remove pavement markings that fail to meet requirements, and replace at the Contractor's expense. Replace failing markings within 30 days of notification.

666.5. Measurement. This Item will be measured by the foot; by each word, symbol, or shape; or by any other unit shown on the plans. Each stripe will be measured separately.

This is a plans quantity measurement Item. The quantity to be paid is the quantity shown in the proposal unless modified by Article 9.2, "Plans Quantity Measurement." Additional measurements or calculations will be made if adjustments of quantities are required.

Acrylic or epoxy sealer, or Type II markings when used as a sealer for Type I markings, will be measured by the foot; by each word, symbol, or shape; or by any other unit shown on the plans.

666.6. Payment. The work performed and materials furnished in accordance with this Item and measured as provided under "Measurement" will be paid for at the unit price bid for "Pavement Sealer" of the size specified or "Reflectorized Pavement Markings" of the type and color specified and the shape, width, size, and thickness (Type I markings only) specified as applicable. This price is full compensation for materials, application of pavement markings, equipment, labor, tools, and incidentals.

Surface preparation of new concrete and asphalt concrete pavements more than 3 years old, where no stripe exists, will be paid for under Item 678, "Pavement Surface Preparation for Markings." Surface preparation of all other asphalt and old concrete pavement, except for sealing, will not be paid for directly but is subsidiary to this Item.

Work-zone pavement markings (Type II, paint and beads) used as a sealer for Type I markings (thermoplastic) will be paid for under Item 662, "Work Zone Pavement Markings."

If the Engineer requires that markings be placed in inclement weather, repair or replacement of markings damaged by the inclement weather will be paid for in addition to the original plans quantity.

ITEM 672

RAISED PAVEMENT MARKERS

672.1. Description. Furnish and install raised pavement markers.

672.2. Materials.

A. Markers. Furnish raised pavement markers meeting the requirements of the following Department Material Specifications:

- **Jiggle Bar Tile.** DMS-4100, "Jiggle Bar Tile," types I-A, II-A-A, W, and Y.
- **Reflectorized Pavement Markers.** DMS-4200, "Pavement Markers (Reflectorized)," types I-A, I-C, I-R, II-A-A, and II-C-R.
- **Traffic Buttons.** DMS-4300, "Traffic Buttons," types I-A, I-C, I-R, II-A-A, II-C-R, W, and Y. Round or oval unless otherwise specified in the plans.
- **Plowable Reflectorized Pavement Markers.** DMS-4210, "Pavement Markers (Plowable Reflectorized)," types I-A, I-C, I-R, II-A-A, and II-C-R.

The following are descriptions for each type of raised pavement marker:

- **Type I-A.** Type I-A must contain an approach face that retro-reflects amber light. The body, other than the retro-reflective face must be yellow.
- **Type I-C.** Type I-C must contain an approach face that retro-reflects white light. The body, other than the retro-reflective face must be white or silver-white.
- **Type I-R.** Type I-R must contain a trailing face that retro-reflects red light. The body, other than the retro-reflective face must be white or silver-white.
- **Type II-A-A.** Type II-A-A must contain two retro-reflective faces (approach and trailing) each that retro-reflect amber light. The body, other than the retro-reflective faces, must be yellow.
- **Type II-C-R.** Type II-C-R must contain two retro-reflective faces, an approach face that retro-reflects white light and a trailing face that retro-reflects red light. The body, other than the retro-reflective faces, must be white or silver-white.
- **Type W.** Type W has a white body and no reflective faces.
- **Type Y.** Type Y has a yellow body and no reflective faces.

B. Adhesives. Furnish adhesives that conform to the following requirements:

- DMS-6100, "Epoxies and Adhesives."
- DMS-6130, "Bituminous Adhesive for Pavement Markers."

C. Sampling. The Engineer will sample in accordance with Tex-729-I.

672.3. Construction. Remove existing raised pavement markers in accordance with Item 677, "Eliminating Existing Pavement Markings and Markers" (except for measurement and payment). Furnish raised pavement markers for each class from the same manufacturer. Place raised pavement markers on the new asphaltic concrete surface or surface treatment only after the new surface has aged at least 14 days.

When shown on the plans, prepare all surfaces in accordance with Item 678, "Pavement Surface Preparation for Markings." Ensure that the bond surfaces are free of dirt, curing compound, grease, oil, moisture, loose or unsound pavement markings, and any other material that would adversely affect the adhesive bond.

Establish pavement marking guides to mark the lateral location of raised pavement markers as shown on the plans and as directed. Do not make permanent marks on the roadway for the guides.

Place raised pavement markers in proper alignment with the guides. Acceptable placement deviations are shown on the plans.

Remove raised pavement markers placed out of alignment or sequence, as shown on the plans or stated in this specification, at Contractor's expense, in accordance with Item 677, "Eliminating Existing Pavement Markings and Markers" (except for measurement and payment).

Use the following adhesive materials for placement of raised pavement markers unless otherwise shown on the plans:

- epoxy adhesive for plowable reflectorized pavement markers.
- bituminous adhesive for jiggle bar tile; reflectorized pavement markers described in DMS-4200, "Pavement Markers (Reflectorized)"; and traffic buttons on bituminous pavements.
- epoxy adhesive for jiggle bar tile, reflectorized pavement markers described in DMS-4200, and traffic buttons on hydraulic cement concrete pavements.

Apply adhesives in sufficient quantity to:

- ensure that 100% of the bonding area of raised pavement markers is in contact with the adhesive, and
- ensure that raised pavement markers, except for plowable markers, are seated on a continuous layer of adhesive and not in contact with the pavement surface.

Apply adhesives in accordance with manufacturer's recommendations unless otherwise required by this Article. Apply bituminous adhesive only when pavement temperature and raised pavement marker temperature are 40°F or higher. Do not heat bituminous adhesive above 400°F. Agitate bituminous adhesive to ensure even heat distribution.

Machine-mix epoxy adhesive.

Furnish raised pavement markers free of rust, scale, dirt, oil, grease, moisture, and contaminants that might adversely affect the adhesive bond.

Place raised pavement markers immediately after the adhesive is applied and ensure proper bonding. Do not use adhesives or any other material that impairs the functional retro-reflectivity of the raised pavement markers.

672.4. Measurement. This Item will be measured by each raised pavement marker.

This is a plans quantity measurement Item. The quantity to be paid is the quantity shown in the proposal, unless modified by Article 9.2, "Plans Quantity Measurement." Additional measurements or calculations will be made if adjustments are required.

672.5. Payment. The work performed and materials furnished in accordance with this Item and measured as provided under "Measurement" will be paid for at the unit price bid for "Jiggle Bar Tile," "Reflectorized Pavement Marker," "Traffic Button," or "Plowable Reflectorized Pavement Marker" of the types specified. This price is full compensation for removing existing markers; furnishing and installing raised pavement markers; and equipment, materials, labor, tools, and incidentals.

ITEM 677

ELIMINATING EXISTING PAVEMENT MARKINGS AND MARKERS

677.1. Description. Eliminate existing pavement markings and raised pavement markers.

677.2. Materials. Furnish surface treatment materials in accordance with Item 300, "Asphalts, Oils, and Emulsions"; Item 302, "Aggregates for Surface Treatments"; and Item 316, "Surface Treatments." Use approved patching materials for repairing damaged surfaces.

Use a commercial abrasive blasting medium capable of producing the specified surface cleanliness. Use potable water when water is required.

677.3. Equipment. Furnish and maintain equipment in good working condition. Use moisture and oil traps in air compression equipment to remove all contaminants from the blasting air and prevent the deposition of moisture, oil, or other contaminants on the roadway surface.

677.4. Construction. Eliminate existing pavement markings and markers on both concrete and asphaltic surfaces in such a manner that color and texture contrast of the pavement surface will be held to a minimum. Repair damage to asphaltic surfaces, such as spalling, shelling, etc., greater than 1/4 in. in depth resulting from the removal of pavement markings and markers. Dispose of markers in accordance with federal, state, and local regulations. Use any of the following methods unless otherwise shown on the plans.

A. Surface Treatment Method. Apply surface treatment material at rates shown on the plans or as directed. Place a surface treatment a minimum of 2 ft. wide to cover the existing marking. Place a surface treatment, thin overlay, or microsurfacing a minimum of 1 lane in width in areas where directional changes of traffic are involved or in other areas as directed by the Engineer.

B. Burn Method. Use an approved burning method. For thermoplastic pavement markings or prefabricated pavement markings, heat may be applied to remove the bulk of the marking material prior to blast cleaning. When using heat, avoid spalling pavement surfaces. Sweeping or light blast cleaning may be used to remove minor residue.

C. Blasting Method. Use a blasting method such as water blasting, abrasive blasting, water abrasive blasting, shot blasting, slurry blasting, water-injected abrasive blasting, or brush blasting as approved. Remove pavement markings on concrete surfaces by a blasting method only.

D. Mechanical Method. Use any mechanical method except grinding. Flail milling is acceptable in the removal of markings on asphalt and concrete surfaces.

677.5. Measurement. This Item will be measured by each word, symbol, or shape eliminated; by the foot of marking eliminated; or by any other unit shown on the plans.

This is a plans quantity measurement item. The quantity to be paid is the quantity shown in the proposal unless modified by Article 9.2, “Plans Quantity Measurement.” Additional measurements or calculations will be made if adjustments of quantities are required.

677.6. Payment. The work performed and materials furnished in accordance with this Item and measured as provided under “Measurement” will be paid for at the unit price bid for “Eliminating Existing Pavement Markings and Markers” of the type and width as applicable. This price is full compensation for the elimination method used and equipment, materials, tools, labor, and incidentals. Removal of raised pavement markers will not be paid for directly and will be subsidiary to the pertinent bid items.

SPECIAL SPECIFICATION
1122
Temporary Erosion, Sedimentation, and Environmental Controls

1. **Description.** Install, maintain, and remove erosion, sedimentation, and environmental control measures to prevent or reduce the discharge of pollutants in accordance with the Storm Water Pollution Prevention Plan (SWP3) as provided in the plans and the Texas Pollutant Discharge Elimination System (TPDES) General Permit TXR150000. Control measures are defined as Best Management Practices used to prevent or reduce the discharge of pollutants. Control measures include but are not limited to rock filter dams, temporary pipe slope drains, temporary paved flumes, construction exits, earthwork for erosion control, pipe, construction perimeter fence, sandbags, temporary sediment control fence, biodegradable erosion control logs, vertical tracking, temporary or permanent seeding, and other measures. Perform work in a manner to prevent degradation of receiving waters, facilitate project construction, and comply with applicable federal, state, and local regulations. Ensure the installation and maintenance of control measures is performed in accordance with the manufacturer's or designer's specifications.

   By signing the Contractor Certification of Compliance, the Contractor certifies they have read and understand the requirements applicable to this project pertaining to the SWP3, the plans, and the TPDES General Permit TXR150000. The Contractor is responsible for any penalties associated with non-performance of installation or maintenance activities required for compliance. Provide the Contractor Certification of Compliance to the Engineer prior to performing earthwork operations. The most current version of the Contractor Certification of Compliance can be found at:
   http://www.txdot.gov/inside-txdot/division/environmental/programs/ems-courses.html.
   A sample of the language has been attached to this specification. Ensure the most current version of the certificate is executed for this project.

2. **Materials.** Furnish materials in accordance with the following:
   - Item 161, "Compost"
   - Item 432, "Riprap"
   - Item 556, "Pipe Underdrains"

A. Rock Filter Dams.

1. **Aggregate.** Furnish aggregate with hardness, durability, cleanliness, and resistance to crumbling, flaking, and eroding acceptable to the Engineer. Provide the following:
   - **Types 1, 2, and 4 Rock Filter Dams.** Use 3 to 6 in. aggregate.
   - **Type 3 Rock Filter Dams.** Use 4 to 8 in. aggregate.

2. **Wire.** Provide minimum 20 gauge galvanized wire for the steel wire mesh and tie wires for Types 2 and 3 rock filter dams. Type 4 dams require:

- A double-twisted, hexagonal weave with a nominal mesh opening of 2-1/2 in. x 3-1/4 in.;
- Minimum 0.0866 in. steel wire for netting;
- Minimum 0.1063 in. steel wire for selvages and corners; and minimum 0.0866 in. for binding or tie wire.

3. Sandbag Material. Furnish sandbags meeting "Sandbags for Erosion Control," except that any gradation of aggregate may be used to fill the sandbags.

B. Temporary Pipe Slope Drains. Provide corrugated metal pipe, polyvinyl chloride (PVC) pipe, flexible tubing, watertight connection bands, grommet materials, prefabricated fittings, and flared entrance sections that conform to the plans. Recycled and other materials meeting these requirements are allowed if approved.

Furnish concrete in accordance with Item 432, "Riprap."

C. Temporary Paved Flumes. Furnish asphalt concrete, hydraulic cement concrete, or other comparable non-erodible material that conforms to the plans. Provide rock or rubble with a minimum diameter of 6 in. and a maximum volume of 1/2 cu. ft. for the construction of energy dissipaters.

D. Construction Exits. Provide materials that meet the details shown on the plans and this Section.

1. Rock Construction Exit. Provide crushed aggregate for long and short-term construction exits. Furnish aggregates that are clean, hard, durable, and free from adherent coatings such as salt, alkali, dirt, clay, loam, shale, soft or flaky materials and organic and injurious matter. Use 4- to 8-in. aggregate for Type 1 and 2- to 4-in. aggregate for Type 3.

2. Timber Construction Exit. Furnish No. 2 quality or better railroad ties and timbers for long-term construction exits, free of large and loose knots and treated to control rot. Fasten timbers with nuts and bolts or lag bolts, of at least 1/2 in. diameter, unless otherwise shown on the plans or allowed. For short-term exits, provide plywood or pressed wafer board at least 1/2 in. thick.

3. Foundation Course. Provide a foundation course consisting of flexible base, bituminous concrete, hydraulic cement concrete, or other materials as shown on the plans or directed.

E. Embankment for Erosion Control. Provide rock, loam, clay, topsoil, or other earth materials that will form a stable embankment to meet the intended use.

F. Pipe. Provide pipe outlet material in accordance with Item 556, "Pipe Underdrains," and details shown on the plans.

G. Construction Perimeter Fence.

1. **Posts.** Provide essentially straight wood or steel posts that are at least 60 in. long. Furnish soft wood posts with a minimum diameter of 3 in. or use 2 x 4 boards. Furnish hardwood posts with a minimum cross-section of 1-1/2 x 1-1/5 in. Furnish T- or L-shaped steel posts with a minimum weight of 1.3 lb. per foot.

2. **Fence.** Provide orange construction fencing as approved by the Engineer.

3. **Fence Wire.** Provide 12-1/2 gauge or larger galvanized smooth or twisted wire. Provide 16 gauge or larger tie wire.

4. **Flagging.** Provide brightly-colored flagging that is fade-resistant and at least 3/4 in. wide to provide maximum visibility both day and night.

5. **Staples.** Provide staples with a crown at least 1/2 in. wide and legs at least 1/2 in. long.

6. **Used Materials.** Previously used materials meeting the applicable requirements may be used if accepted by the Engineer.

H. Sandbags. Provide sandbag material of polypropylene, polyethylene, or polyamide woven fabric with a minimum unit weight of 4 oz. per square yard, a Mullen burst-strength exceeding 300 psi, and an ultraviolet stability exceeding 70%.

Use natural coarse sand or manufactured sand meeting the gradation given in Table 1 to fill sandbags. Filled sandbags must be 24 to 30 in. long, 16 to 18 in. wide, and 6 to 8 in. thick.

Table 1
Sand Gradation

Sieve #	Retained (% by Weight)
4	MAXIMUM 3%
100	MINIMUM 80%
200	MINIMUM 95%

Aggregate may be used in lieu of sand for situations where sandbags are not adjacent to traffic. The aggregate size shall not exceed 3/8 in.

I. Temporary Sediment Control Fence. Provide a net-reinforced fence using woven geo-textile fabric. Logos visible to the traveling public will not be allowed.

1. **Fabric.** Provide fabric materials in accordance with DMS-6230, "Temporary Sediment Control Fence Fabric."

2. **Posts.** Provide essentially straight wood or steel posts with a minimum length of 48 in., unless otherwise shown on the plans. Soft wood posts must be at least 3 in. in diameter or nominal 2 x 4in. Hardwood posts must have a minimum cross-section of 1-1/2 x 1-1/2 in. T- or L-shaped steel posts must have a minimum weight of 1.3 lb. per foot.

3. **Net Reinforcement.** Provide net reinforcement of at least 12-1/2 gauge galvanized welded wire mesh, with a maximum opening size of 2 x 4 in., at least 24 in. wide, unless otherwise shown on the plans.

4. **Staples.** Provide staples with a crown at least 3/4 in. wide and legs 1/2 in. long.

5. **Used Materials.** Use recycled material meeting the applicable requirements if accepted by the Engineer.

J. Biodegradable Erosion Control Logs.

1. **Core Material.** Furnish core material that is biodegradable or recyclable. Except where specifically called out in plans, material may be compost, mulch, aspen excelsior wood fibers, chipped site vegetation, agricultural rice or wheat straw, coconut fiber, 100% recyclable fibers, or any other acceptable material. No more than 5% of the material is permitted to escape from the containment mesh. Furnish compost meeting the requirements of Item 161, "Compost."

2. **Containment Mesh.** Furnish containment mesh that is 100% biodegradable, photodegradable or recyclable such as burlap, twine, UV photodegradable plastic, polyester, or any other acceptable material.

   a. Furnish biodegradable or photodegradable containment mesh when log will remain in place as part of a vegetative system.

   b. Furnish recyclable containment mesh for temporary installations.

3. **Size.** Furnish biodegradable erosion control logs with diameters shown on the plans or as directed. Stuff containment mesh densely so logs do not deform.

3. Qualifications, Training, and Employee Requirements.

A. Contractor Responsible Person Environmental (CRPe) Qualifications and Responsibilities. Provide and designate in writing at the preconstruction conference a CRPe who has overall responsibility for the storm water management program. The CRPe will identify and implement storm water and erosion control practices; will oversee and observe storm water control measure monitoring and management; will monitor the project site daily to ensure compliance with the SWP3 and TPDES General Permit TXR150000; and will document daily monitoring reports and provide the reports to the Department within 48 hours. The CRPe will provide recommendations to the Engineer on how to improve the effectiveness of control measures. Attend the Department's preconstruction conference for the project. Administer the training identified in Article 3.C. *Training.* Document and submit a list to the Engineer of employees who have completed the training. The list should include the employee's name, the training course name, and date the employee completed the training. Provide the most current list to the Engineer at the preconstruction conference or prior to earth disturbing activities. Maintain the list as needed and make available for inspection.

B. Contractor Superintendent Qualifications and Responsibilities. Provide a superintendent that is competent and has experience with and knowledge of storm water management and is knowledgeable of the requirements and the conditions of the TPDES General Permit TXR150000. The superintendent is responsible for managing and overseeing the day to day operations and activities at the project site; working with the CRPe to provide effective storm water management at the project site; representing and acting on-behalf of the Contractor; and attending the Department's preconstruction conference for the project.

C. Training. All Contractor and subcontractor employees directly involved in the earthwork activities, small or large structures, storm water control measures, and seeding activities are required to complete the training identified by the Department prior to working in the right of way. Training may take place at a location at the discretion of the Contractor.

4. Construction.

A. Contractor Responsibilities. Implement the SWP3 for the project site in accordance with in accordance with the plans and specifications, TPDES General Permit TXR150000, and as directed by the Engineer. Coordinate storm water management with all other work on the project. Develop and implement an SWP3 for project-specific material supply plants within and outside of the Department's right of way in accordance with the specific or general storm water permit requirements. Prevent water pollution from storm water associated with construction activity from entering any surface water or private property on or adjacent to the project site.

B. Implementation. The CRPe, or an alternate, must be accessible by phone and able to respond to storm water management emergencies 24 hours per day.

1. Commencement. Implement the SWP3 as shown and as directed. Contractor proposed recommendations for changes will be allowed as approved. Conform to the established guidelines in the TPDES General Permit TXR150000 to make changes. Do not implement changes until approval has been received and changes have been incorporated into the plans by the Engineer. Minor adjustments to meet field conditions are allowed and will be recorded by the Engineer in the SWP3.

2. Phasing. Implement control measures prior to the commencement of activities that result in soil disturbance. Phase and minimize the soil disturbance to the areas shown on the plans. Coordinate temporary control measures with permanent control measures and all other work activities on the project to assure economical, effective, safe, continuous water pollution prevention. Provide control measures that are appropriate to the construction means, methods, and sequencing allowed by the Contract. Exercise precaution throughout the life of the project to prevent pollution of ground waters and surface waters. Schedule and perform clearing and grubbing operations so that stabilization measures will follow immediately thereafter if project conditions permit. Bring all grading sections to final grade as soon as possible and implement temporary and permanent control measures at the earliest time possible. Implement temporary control measures when required by the TPDES General Permit TXR150000 or otherwise necessitated by project conditions.

Do not prolong final grading and shaping. Preserve vegetation where possible throughout the project and minimize clearing, grubbing, and excavation within stream banks, bed, and approach sections.

C. General.

1. **Temporary Alterations or Control Measure Removal.** Altering or removal of control measures is allowed when control measures are restored within the same working day.

2. **Stabilization.** Initiate stabilization for disturbed areas no more than 14 days after the construction activities in that portion of the site has temporarily or permanently ceased. Establish a uniform vegetative cover or utilize another stabilization practice in accordance with the TPDES General Permit TXR150000.

3. **Finished Work.** Upon the Engineer's acceptance of vegetative cover or other stabilization practice, remove and dispose of all temporary control measures unless otherwise directed. Complete soil disturbing activities and establish a uniform perennial vegetative cover. A project will not be considered for acceptance until a vegetative cover of 70% density of existing adjacent undisturbed areas is obtained or equivalent permanent stabilization is obtained in accordance with the TPDES General Permit TXR150000. An exception will be allowed in arid areas as defined in the TPDES General Permit TXR150000.

4. **Restricted Activities and Required Precautions.** Do not discharge onto the ground or surface waters any pollutants such as chemicals, raw sewage, fuels, lubricants, coolants, hydraulic fluids, bitumens, or any other petroleum product. Operate and maintain equipment on site in a manner as to prevent actual or potential water pollution. Manage, control, and dispose of litter on site such that no adverse impacts to water quality occur. Prevent dust from creating a potential or actual unsafe condition, public nuisance, or condition endangering the value, utility, or appearance of any property. Wash out concrete trucks only as described in the TPDES General Permit TXR150000. Utilize appropriate controls to minimize the offsite transport of suspended sediments and other pollutants if it is necessary to pump or channel standing water (i.e. dewatering). Prevent discharges that would contribute to a violation of Edwards Aquifer Rules, water quality standards, the impairment of a listed water body, or other state or federal law.

D. Installation, Maintenance, and Removal Work. Perform work in accordance with the SWP3, according to manufacturers' guidelines, and in accordance with the TPDES General Permit TXR150000. Install and maintain the integrity of temporary erosion and sedimentation control devices to accumulate silt and debris until earthwork construction and permanent erosion control features are in place or the disturbed area has been adequately stabilized as determined by the Engineer.

The Department will inspect and document the condition of the control measures at the frequency shown on the plans and will provide the Construction SWP3 Field Inspection and Maintenance Reports to the Contractor. Make corrections as soon as possible before the next anticipated rain event or within 7 calendar days after being able to enter the work site for each control measure.

The only acceptable reason for not accomplishing the corrections with the time frame specified is when site conditions are "Too Wet to Work". If a correction is deemed critical by the Engineer, immediate action is required. When corrections are not made within the established time frame, all work will cease on the project and time charges will continue while the control measures are brought into compliance. Once the Engineer reviews and documents the project is in compliance, work may commence. Commencing work does not release the contractor of the liability for noncompliance of the SWP3, plans, or TPDES General Permit TXR150000.

The Engineer may limit the disturbed area if in the opinion of the Engineer the Contractor cannot control soil erosion and sedimentation resulting from the Contractor's operations. Implement additional controls as directed.

Remove devices upon approval or as directed. Upon removal, finish-grade and dress the area. Stabilize disturbed areas in accordance with the permit, and as shown on the plans or directed. The Contractor retains ownership of stockpiled material and must remove it from the project when new installations or replacements are no longer required.

1. **Rock Filter Dams for Erosion Control.** Remove trees, brush, stumps, and other objectionable material that may interfere with the construction of rock filter dams. Place sandbags as a foundation when required or at the Contractor's option.

   For Types 1, 2, 3, and 5, place the aggregate to the lines, height, and slopes specified, without undue voids. For Types 2 and 3, place the aggregate on the mesh and then fold the mesh at the upstream side over the aggregate and secure it to itself on the downstream side with wire ties, or hog rings, or as directed. Place rock filter dams perpendicular to the flow of the stream or channel unless otherwise directed. Construct filter dams according to the following criteria, unless otherwise shown on the plans:

   a. Type 1 (Non-reinforced).

   (1) Height. At least 18 in. measured vertically from existing ground to top of filter dam.

   (2) Top Width. At least 2 ft.

   (3) Slopes. At most 2:1.

   b. Type 2 (Reinforced).

   (1) Height. At least 18 in. measured vertically from existing ground to top of filter dam.

   (2) Top Width. At least 2 ft.

   (3) Slopes. At most 2:1.

c. Type 3 (Reinforced).

(1) Height. At least 36 in. measured vertically from existing ground to top of filter dam.

(2) Top Width. At least 2 ft.

(3) Slopes. At most 2:1.

d. Type 4 (Sack Gabions). Unfold sack gabions and smooth out kinks and bends. For vertical filling, connect the sides by lacing in a single loop–double loop pattern on 4- to 5-in. spacing. At one end, pull the end lacing rod until tight, wrap around the end, and twist 4 times. At the filling end, fill with stone, pull the rod tight, cut the wire with approximately 6 in. remaining, and twist wires 4 times.

For horizontal filling, place sack flat in a filling trough, fill with stone, and connect sides and secure ends as described above.

Lift and place without damaging the gabion. Shape sack gabions to existing contours.

e. Type 5. Provide rock filter dams as shown on the plans.

2. Temporary Pipe Slope Drains. Install pipe with a slope as shown on the plans or as directed. Construct embankment for the drainage system in 8-in. lifts to the required elevations. Hand-tamp the soil around and under the entrance section to the top of the embankment as shown on the plans or as directed. Form the top of the embankment or earth dike over the pipe slope drain at least 1 ft. higher than the top of the inlet pipe at all points. Secure the pipe with hold-downs or hold-down grommets spaced a maximum of 10 ft. on center. Construct the energy dissipaters or sediment traps as shown on the plans or as directed. Construct the sediment trap using concrete or rubble riprap in accordance with Item 432, "Riprap," when designated on the plans.

3. Temporary Paved Flumes. Construct paved flumes as shown on the plans or as directed. Provide excavation and embankment (including compaction of the subgrade) of material to the dimensions shown on the plans, unless otherwise indicated. Install a rock or rubble riprap energy dissipater, constructed from the materials specified above to a minimum depth of 9 in. at the flume outlet to the limits shown on the plans or as directed.

4. Construction Exits. When tracking conditions exist, prevent traffic from crossing or exiting the construction site or moving directly onto a public roadway, alley, sidewalk, parking area, or other right of way areas other than at the location of construction exits. Construct exits for either long or short-term use.

a. Long-Term. Place the exit over a foundation course, if necessary. Grade the foundation course or compacted subgrade to direct runoff from the construction exits to a sediment trap as shown on the plans or as directed. Construct exits with a

width of at least 14 ft. for one-way and 20 ft. for two-way traffic for the full width of the exit, or as directed.

(1) Type 1. Construct to a depth of at least 8 in. using crushed aggregate as shown on the plans or as directed.

(2) Type 2. Construct using railroad ties and timbers as shown on the plans or as directed.

b. Short-Term.

(1) Type 3. Construct using crushed aggregate, plywood, or wafer board. This type of exit may be used for daily operations where long-term exits are not practical.

(2) Type 4. Construct as shown on the plans or as directed.

5. **Earthwork for Erosion Control.** Perform excavation and embankment operations to minimize erosion and to remove collected sediments from other erosion control devices.

   a. **Excavation and Embankment for Erosion Control Features.** Place earth dikes, swales, or combinations of both along the low crown of daily lift placement, or as directed, to prevent runoff spillover. Place swales and dikes at other locations as shown on the plans or as directed to prevent runoff spillover or to divert runoff. Construct cuts with the low end blocked with undisturbed earth to prevent erosion of hillsides. Construct sediment traps at drainage structures in conjunction with other erosion control measures as shown on the plans or as directed.

   Where required, create a sediment basin providing 3,600 cu. ft. of storage per acre drained, or equivalent control measures for drainage locations that serve an area with 10 or more disturbed acres at one time, not including offsite areas.

   b. **Excavation of Sediment and Debris.** Remove sediment and debris when accumulation affects the performance of the devices, after a rain, and when directed.

6. **Construction Perimeter Fence.** Construct, align, and locate fencing as shown on the plans or as directed.

   a. **Installation of Posts.** Embed posts 18 in. deep or adequately anchor in rock, with a spacing of 8 to 10 ft.

   b. **Wire Attachment.** Attach the top wire to the posts at least 3 ft. from the ground. Attach the lower wire midway between the ground and the top wire.

   c. **Flag Attachment.** Attach flagging to both wire strands midway between each post. Use flagging at least 18 in. long. Tie flagging to the wire using a square knot.

7. **Sandbags for Erosion Control.** Construct a berm or dam of sandbags that will intercept sediment-laden storm water runoff from disturbed areas, create a retention pond, detain

sediment, and release water in sheet flow. Fill each bag with sand so that at least the top 6 in. of the bag is unfilled to allow for proper tying of the open end. Place the sandbags with their tied ends in the same direction. Offset subsequent rows of sandbags 1/2 the length of the preceding row. Place a single layer of sandbags downstream as a secondary debris trap. Place additional sandbags as necessary or as directed for supplementary support to berms or dams of sandbags or earth.

8. **Temporary Sediment-Control Fence.** Provide temporary sediment-control fence near the downstream perimeter of a disturbed area to intercept sediment from sheet flow. Incorporate the fence into erosion-control measures used to control sediment in areas of higher flow. Install the fence as shown on the plans, as specified in this Section, or as directed.

   a. **Installation of Posts.** Embed posts at least 18 in. deep, or adequately anchor, if in rock, with a spacing of 6 to 8 ft. and install on a slight angle toward the run-off source.

   b. **Fabric Anchoring.** Dig trenches along the uphill side of the fence to anchor 6 to 8 in. of fabric. Provide a minimum trench cross-section of 6 x 6 in. Place the fabric against the side of the trench and align approximately 2 in of fabric along the bottom in the upstream direction. Backfill the trench, then hand-tamp.

   c. **Fabric and Net Reinforcement Attachment.** Unless otherwise shown under the plans, attach the reinforcement to wooden posts with staples, or to steel posts with T-clips, in at least 4 places equally spaced. Sewn vertical pockets may be used to attach reinforcement to end posts. Fasten the fabric to the top strand of reinforcement by hog rings or cord every 15 in. or less.

   d. **Fabric and Net Splices**. Locate splices at a fence post with a minimum lap of 6 in. attached in at least 6 places equally spaced, unless otherwise shown under the plans. Do not locate splices in concentrated flow areas.

   Requirements for installation of used temporary sediment-control fence include the following:

   - fabric with minimal or no visible signs of biodegradation (weak fibers),
   - fabric without excessive patching (more than 1 patch every 15 to 20 ft.),
   - posts without bends, and
   - backing without holes.

9. **Biodegradable Erosion Control Logs.** Install biodegradable erosion control logs near the downstream perimeter of a disturbed area to intercept sediment from sheet flow. Incorporate the biodegradable erosion control logs into the erosion measures used to control sediment in areas of higher flow. Install, align and locate the biodegradable erosion control logs as specified below, as shown in plans or as directed.

Secure biodegradable erosion control logs in a method adequate to prevent displacement as a result of normal rain events, prevent damage to the logs, and to the satisfaction of the Engineer such that flow is not allowed under the logs. Temporarily removing and replacing biodegradable erosion logs as to facilitate daily work is allowed at the Contractor's expense.

10. **Vertical Tracking.** Perform vertical tracking on slopes to temporarily stabilize soil. Provide equipment with a track undercarriage capable of producing a linear soil impression measuring a minimum of 12 inches in length by 2 to 4 inches in width by 1/2 to 2 inches in depth. Do not exceed 12 inches between track impressions. Install continuous linear track impressions where the 12 inch length impressions are perpendicular to the slope.

E. Monitoring and Documentation. Monitor the control measures on a daily basis. Monitoring will consist of, but is not limited to, observing, inspecting, and documenting site locations with control measures and discharge points to provide maintenance and inspection of controls as described in the SWP3. Keep written records of daily monitoring. Document in the daily monitoring report the control measure condition, the date of inspection, required corrective actions, responsible person for making the corrections, and the date corrective actions were completed. Maintain records of all monitoring reports at the project site or at a place approved by the Engineer. Provide copies to the Engineer. Together, the CRPe and an Engineer's representative will complete the Construction Stage Gate Checklist on a periodic basis as determined by the Engineer.

5. Measurement.

A. Rock Filter Dams. Installation or removal of rock filter dams will be measured by the foot or by the cubic yard. The measured volume will include sandbags, when used.

1. **Linear Measurement.** When rock filter dams are measured by the foot, measurement will be along the centerline of the top of the dam.

2. **Volume Measurement.** When rock filter dams are measured by the cubic yard, measurement will be based on the volume of rock computed by the method of average end areas.

   a. Installation. Measurement will be made in final position.

   b. Removal. Measurement will be made at the point of removal.

B. Temporary Pipe Slope Drains. Temporary pipe slope drains will be measured by the foot.

C. Temporary Paved Flumes. Temporary paved flumes will be measured by the square yard of surface area. The measured area will include the energy dissipater at the flume outlet.

D. Construction Exits. Construction exits will be measured by the square yard of surface area.

E. Earthwork for Erosion and Sediment Control.

1. **Equipment and Labor Measurement.** Equipment and labor used will be measured by the actual number of hours the equipment is operated and the labor is engaged in the work.

2. **Volume Measurement.**

   a. **In Place.**

      (1) **Excavation.** Excavation will be measured by the cubic yard in its original position and the volume computed by the method of average end areas.

      (2) **Embankment.** Embankment will be measured by the cubic yard in its final position by the method of average end areas. The volume of embankment will be determined between:
      - the original ground surfaces or the surface upon that the embankment is to be constructed for the feature and
      - the lines, grades and slopes of the accepted embankment for the feature.

   b. **In Vehicles.** Excavation and embankment quantities will be combined and paid for under "Earthwork (Erosion and Sediment Control, In Vehicle)." Excavation will be measured by the cubic yard in vehicles at the point of removal. Embankment will be measured by the cubic yard in vehicles measured at the point of delivery. Shrinkage or swelling factors will not be considered in determining the calculated quantities.

F. Construction Perimeter Fence. Construction perimeter fence will be measured by the foot.

G. Sandbags for Erosion Control. Sandbags will be measured as each sandbag or by the foot along the top of sandbag berms or dams.

H. Temporary Sediment-Control Fence. Installation or removal of temporary sediment-control fence will be measured by the foot.

I. Biodegradable Erosion Control Logs. Installation or removal of biodegradable erosion control logs will be measured by the linear foot along the centerline of the top of the control logs.

J. Vertical Tracking. Vertical tracking will not be measured or paid for directly but is considered subsidiary to this Item.

6. Payment. The following will not be paid for directly but are subsidiary to pertinent Items:

- erosion-control measures for Contractor project-specific locations (PSLs) inside and outside the right of way (such as construction and haul roads, field offices, equipment and supply areas, plants, and material sources);

- removal of litter; unless a separate pay item is shown in the plans.
- repair to devices and features damaged by Contractor operations;
- added measures and maintenance needed due to negligence, carelessness, lack of maintenance, and failure to install permanent controls;
- removal and reinstallation of devices and features needed for the convenience of the Contractor;
- finish grading and dressing upon removal of the device; and
- minor adjustments including but not limited to plumbing posts, reattaching fabric, minor grading to maintain slopes on an erosion embankment feature, or moving small numbers of sandbags.

Stabilization of disturbed areas will be paid for under pertinent Items.

Furnishing and installing pipe for outfalls associated with sediment traps and ponds will not be paid for directly but is subsidiary to the excavation and embankment under this Item.

A. Rock Filter Dams. The work performed and materials furnished in accordance with this Item and measured as provided under "Measurement" will be paid for at the unit price bid as follows:

1. **Installation.** Installation will be paid for as "Rock Filter Dams (Install)" of the type specified. This price is full compensation for furnishing and operating equipment, finish backfill and grading, lacing, proper disposal, labor, materials, tools, and incidentals.

2. **Removal.** Removal will be paid for as "Rock Filter Dams (Remove)." This price is full compensation for furnishing and operating equipment, proper disposal, labor, materials, tools, and incidentals.

When the Engineer directs that the rock filter dam installation or portions thereof be replaced, payment will be made at the unit price bid for "Rock Filter Dams (Remove)" and for "Rock Filter Dams (Install)" of the type specified. This price is full compensation for furnishing and operating equipment, finish backfill and grading, lacing, proper disposal, labor, materials, tools, and incidentals.

B. Temporary Pipe Slope Drains. The work performed and materials furnished in accordance with this Item and measured as provided under "Measurement" will be paid for at the unit price bid for "Temporary Pipe Slope Drains" of the size specified. This price is full compensation for furnishing materials, removal and disposal, furnishing and operating equipment, labor, tools, and incidentals.

Removal of temporary pipe slope drains will not be paid for directly but is subsidiary to the installation Item. When the Engineer directs that the pipe slope drain installation or portions thereof be replaced, payment will be made at the unit price bid for "Temporary Pipe Slope Drains" of the size specified, which is full compensation for the removal and reinstallation of the pipe drain.

Earthwork required for the pipe slope drain installation, including construction of the sediment trap, will be measured and paid for under "Earthwork for Erosion and Sediment Control."

Riprap concrete or stone, when used as an energy dissipater or as a stabilized sediment trap, will be measured and paid for in accordance with Item 432, "Riprap."

C. Temporary Paved Flumes. The work performed and materials furnished in accordance with this Item and measured as provided under "Measurement" will be paid for at the unit price bid for "Temporary Paved Flume (Install)" or "Temporary Paved Flume (Remove)." This price is full compensation for furnishing and placing materials, removal and disposal, equipment, labor, tools, and incidentals.

When the Engineer directs that the paved flume installation or portions thereof be replaced, payment will be made at the unit prices bid for "Temporary Paved Flume (Remove)" and "Temporary Paved Flume (Install)." These prices are full compensation for the removal and replacement of the paved flume and for equipment, labor, tools, and incidentals.

Earthwork required for the paved flume installation, including construction of a sediment trap, will be measured and paid for under "Earthwork for Erosion and Sediment Control."

D. Construction Exits. Contractor-required construction exits from off right of way locations or on-right of way PSLs will not be paid for directly but are subsidiary to pertinent Items.

The work performed and materials furnished in accordance with this Item and measured as provided under "Measurement" for construction exits needed on right of way access to work areas required by the Department will be paid for at the unit price bid for "Construction Exits (Install)" of the type specified or "Construction Exits (Remove)." This price is full compensation for furnishing and placing materials, excavating, removal and disposal, cleaning vehicles, labor, tools, and incidentals.

When the Engineer directs that a construction exit or portion thereof be removed and replaced, payment will be made at the unit prices bid for "Construction Exit (Remove)" and "Construction Exit (Install)" of the type specified. These prices are full compensation for the removal and replacement of the construction exit and for equipment, labor, tools, and incidentals.

Construction of sediment traps used in conjunction with the construction exit will be measured and paid for under "Earthwork for Erosion and Sediment Control."

E. Earthwork for Erosion and Sediment Control.

1. **Initial Earthwork for Erosion and Sediment Control.** The work performed and materials furnished in accordance with this Item and measured as provided under "Measurement" will be paid for at the unit price bid for "Excavation (Erosion and Sediment Control, In Place)", "Embankment (Erosion and Sediment Control, In Place)", "Excavation (Erosion and Sediment Control, In Vehicle)", "Embankment (Erosion and

Sediment Control, In Vehicle)", or "Earthwork (Erosion and Sediment Control, In Vehicle)".

This price is full compensation for excavation and embankment including hauling, disposal of material not used elsewhere on the project; embankments including furnishing material from approved sources and construction of erosion-control features; equipment, labor; tools, and incidentals.

Sprinkling and rolling required by this Item will not be paid for directly, but will be subsidiary to this Item.

2. **Maintenance Earthwork for Erosion and Sediment Control for Cleaning and/or Restoring Control Measures.** The work performed and materials furnished in accordance with this Item and measured as provided under "Measurement" will be paid for by a Contractor Force Account Item.

   This price is full compensation for excavation, embankment, and re-grading including removal of accumulated sediment in various erosion control installations as directed, hauling, and disposal of material not used elsewhere on the project; excavation for construction of erosion-control features; embankments including furnishing material from approved sources and construction of erosion-control features; and equipment, labor; tools, and incidentals.

   Earthwork needed to remove and obliterate of erosion-control features will not be paid for directly but is subsidiary to pertinent Items unless otherwise shown on the plans.

   Sprinkling and rolling required by this Item will not be paid for directly, but will be subsidiary to this Item.

F. Construction Perimeter Fence. The work performed and materials furnished in accordance with this Item and measured as provided under "Measurement" will be paid for at the unit price bid for "Construction Perimeter Fence." This price is full compensation for furnishing and placing the fence; digging, fence posts, wire, and flagging; removal and disposal; and materials, equipment, labor, tools, and incidentals.

Removal of construction perimeter fence will be not be paid for directly but is subsidiary to the installation Item. When the Engineer directs that the perimeter fence installation or portions thereof be removed and replaced, payment will be made at the unit price bid for "Construction Perimeter Fence," which is full compensation for the removal and reinstallation of the construction perimeter fence.

G. Sandbags for Erosion Control. Sandbags will be paid for at the unit price bid for "Sandbags for Erosion Control" (of the height specified when measurement is by the foot). This price is full compensation for materials, placing sandbags, removal and disposal, equipment, labor, tools, and incidentals.

Removal of sandbags will not be paid for directly but is subsidiary to the installation Item. When the Engineer directs that the sandbag installation or portions thereof be replaced,

payment will be made at the unit price bid for "Sandbags for Erosion Control," which is full compensation for the reinstallation of the sandbags.

H. **Temporary Sediment-Control Fence.** The work performed and materials furnished in accordance with this Item and measured as provided under "Measurement" will be paid for at the unit price bid as follows:

1. **Installation.** Installation will be paid for as "Temporary Sediment-Control Fence (Install)." This price is full compensation for furnishing and operating equipment finish backfill and grading, lacing, proper disposal, labor, materials, tools, and incidentals.

2. **Removal.** Removal will be paid for as "Temporary Sediment-Control Fence (Remove)." This price is full compensation for furnishing and operating equipment, proper disposal, labor, materials, tools, and incidentals.

I. **Biodegradable Erosion Control Logs.** The work performed and materials furnished in accordance with this Item and measured as provided under "Measurement" will be paid for at the unit price bid as follows:

1. **Installation.** Installation will be paid for as "Biodegradable Erosion Control Logs (Install)" of the size specified. This price is full compensation for furnishing and operating equipment finish backfill and grading, staking, proper disposal, labor, materials, tools, and incidentals.

2. **Removal.** Removal will be paid for as "Biodegradable Erosion Control Logs (Remove)." This price is full compensation for furnishing and operating equipment, proper disposal, labor, materials, tools, and incidentals.

J. **Vertical Tracking.** Vertical tracking will not be measured or paid for directly but is considered subsidiary to this Item.

CONTRACTOR CERTIFICATION OF COMPLIANCE
WITH STORM WATER REQUIREMENTS

I, _____ certify that I am the duly appointed representative of the Contractor with authority to make this Contractor certification. I have read and understand the requirements applicable to this project pertaining to storm water discharge authorization under Texas Pollutant Discharge Elimination System (TPDES) General Permit (GP) TXR150000. The Contractor agrees to comply with the terms of the permit that are expressly stated in the contract documents as being the responsibility of the Contractor. I have read and understand the Storm Water Pollution Prevention Plan (SWP3) developed by the Department for this project. The Contractor agrees it will be implemented prior to construction according to permit requirements and the contract documents. I understand that failure to comply with the terms of the permit that are expressly stated in the contract documents, plans, and specifications as being the responsibility of the Contractor may result in civil penalties.

The Contractor acknowledges its responsibility to satisfy the following requirements:

- Implement the SWP3 for the project in accordance with the plans and specifications and the TPDES GP TXR150000.
- Install and maintain control measures on the project in accordance with the manufacturer's or designer's specifications.
- Collaborate with the Department for joint monitoring of best management practices (BMPs) on a regular basis to verify that BMPs are performing as intended in accordance with the plans and specifications and with TPDES GP TXR150000.
- Collaborate with the Department for joint identification of BMP maintenance needs and carry out such maintenance in accordance with the plans and specifications, TPDES GP TXR150000 and as directed by the Engineer.
- Repair the integrity of any BMP as directed by the Engineer as soon as reasonably possible.
- If appropriate, recommend changes needed in the SWP3 to the Engineer in order to prevent, to the extent practicable, water pollution associated with construction activities from entering any surface water or private property on or adjacent to the project site by storm water discharges.
- Stabilize disturbed areas, as soon as practicable, in accordance with the TPDES GP TXR150000 and as directed by the Engineer.
- If applicable, obtain appropriate authorizations for activities associated with any Project Specific Location under the authority of the Contractor and provide appropriate documentation of compliance to the Engineer.
- Satisfy any other responsibility indicated in the contract documents that are expressly stated as the responsibility of the Contractor.

Signature and Title: _____

Date: _____

SAMPLE

Roadbond Service Company

SPECIAL SPECIFICATION

Item 3000 Liquid Stabilizer

LIQUID STABILIZER TREATMENT FOR SUBGRADE SOILS

1. **DESCRIPTION:** This item shall govern for treatment of new and or existing subgrade material by pulverizing adding the liquid stabilizer (Roadbond EN 1 or approved equal), and mixing and compacting the mixed material to the required density as specified herein and in conformity with the typical sections, lines and grades as shown on the plans or as established by the Engineer.

2. **MATERIALS:**

   A. **The liquid stabilizer treatment:** Roadbond EN 1 or approved equal is applied to subgrade soils for reduction of permeability, moisture susceptibility and swell and to improve strength and stiffness. When applied within the manufacturer's parameters for application, dilution, moisture control, processing, compaction and curing the stabilizer shall improve the shear and bearing strength as well as reduce the moisture susceptibility of soil and aggregate materials. Upon request, the supplier must be able to provide independent laboratory test reports from a certified analytical laboratory experienced in environmental acceptability testing documenting tests performed on product samples of the liquid stabilizer products.

   B. **Water.** Water shall meet the requirements of Item 2.2.4 Standard Specification for Public Works Construction (NCTCOG)

   C. **Water Truck:** Water truck may or may not be equipped with an agitator, but shall be capable of even water flow and uniform distribution over the area to be mixed.

   D. **Product Delivery:** Roadbond EN 1 or approved equal shall be delivered, stored and handled in closed, weatherproof containers until immediate distribution on the road. Materials must be stored in covered storage that is well ventilated with adequate protection from theft, flooding or damage. If storage bins are used, they are to be completely enclosed. Insure that the manufacturer's safe handling and mixing instructions are followed without exception.

3. **CONSTRUCTION METHODS:**

   A. **Preparation of Subgrade.** Prior to treating existing material and/or placing any new material, the existing material shall be shaped to conform to the typical sections, as shown on the plans or as established by the Engineer. This work shall be done in accordance with the applicable bid items.

Before pulverizing or scarifying an existing material, when shown on the plans or when directed by the Engineer, the Contractor shall proof roll the roadbed in accordance with special provisions Item 4.2 (A). Soft spots shall be corrected as directed by the Engineer.

When the Contractor uses a reclaimer and/or pulverizing machine that will process the material to the plan depth, the contractor will not be required to excavate to the secondary grade or windrow the material. This method will only be permitted if a machined is provided which will insure that the material is cut uniformly to the proper depth and which has cutters that will plane the secondary grade to a uniform surface over the entire width of the cut. The machine shall provide a visible indication of the depth of the cut at all times.

If the Contractor's equipment will not meet plan depth for cutting and pulverizing, then he/she shall be allowed to windrow in order to expose the secondary base or subgrade for proper cutting and pulverizing.

B. Pulverization: Prior to treatment of new or existing subgrade, materials shall be pulverized to prevent run-off and to facilitate even distribution of the diluted Roadbond EN 1 or approve equal. The liquid stabilizer shall be applied to the subgrade material at a plan depth per lift and rate of application as recommended by the manufacturer, provided the equipment used in preparation, mixing and compaction adequately completes each phase of construction.

C. Moisture Tolerances: Unless otherwise approved by the Engineer, the Roadbond EN 1 or approve equal shall not be installed when soil moisture content measures in excess of optimum moisture content (ASTM D 698) as measured by Test Method ASTM D2216 or ASTM D 3017. If the soil moisture content is above the maximum accepted limit, the soil shall be re-mixed and air-dried (aerate) to reduce the moisture content to within tolerances.

D. Application Method: The Roadbond EN 1 or approve equal shall be applied to the subgrade materials as shown on the plans. Should the plans require a depth greater than a maximum lift of ten (10") inches, the contractor shall be required to work the subgrade material in multiple lifts.

E. Application Preparation: Clean existing base material and pavement surface of all foreign (i.e. loose dirt, organic material), unstable and objectionable material by means of blading, sweeping and/or other approved methods prior to scarifying and/or initial pulverization. The diluted Roadbond EN 1 or approve equal may be applied directly on the existing material after pulverization is complete and accepted by the Engineer.

F. Dilution Ratio and Distribution: The Roadbond EN 1 concentrate shall be diluted with water in the water truck at a ratio of not less than 100 to 1 or more than 300 to 1. The Roadbond EN 1 solution shall then be evenly distributed over the intended area to be mixed in such a manner as to assure even, uniform coverage. (The dilution ratio shall be adjusted to control the moisture content in the mixed material and is not to be confused with the application rate. The application rate is the correct amount of concentrated

Roadbond EN 1, properly diluted, added to the base and/or subgrade material. The dilution ratio is the amount of water used to evenly distribute the correct amount of Roadbond EN 1 over the area to be mixed. Once diluted, the stabilizer solution shall be applied to project materials the same day. Overnight storage will not be permitted.

Multiple passes by the water truck laden with the Roadbond EN 1 solution may be required to insure the proper amount of stabilizer is applied to the area to be mixed. (Refer to manufacturer's application rate). The Roadbond EN 1 shall be applied only on the area where installation operations can be completed during the same working day.

The Contractor shall take precautions when application occurs on uneven of sloping terrain to avoid excess runoff of the Roadbond EN 1 down slopes and/or through the channels in the soil created by the equipment.

G. **Mixing:** The subgrade material and the liquid stabilizer shall be thoroughly mixed by equipment approved by the Engineer. Mixing shall begin when no more than one-half (1/2) of the required diluted Roadbond EN 1 has been evenly placed on the section to be treated. When one pass with the approved mixer over the section is completed, the remaining diluted Roadbond EN 1 shall be placed and the mixing shall continue until the treated material reaches a homogenous mixture and the proper gradation is achieved.

To reduce evaporation, mixing shall not be delayed longer than two (2) hours from the time of initial distribution of the diluted Roadbond EN 1 solution. If the temperature exceeds ninety (90) degrees, then this window is reduced to sixty (60) minutes.

Subgrade soil shall be mixed so that a minimum of ninety-five (95) percent shall pass the 2-inch sieve.

H. **Compaction:** At all times the shape of course shall be maintained by blading and the surface upon completion shall be smooth and in conformity with the typical sections, lines and grades as shown on the plans or as established by the Engineer. Compaction of the mixture shall begin immediately after mixing; pulverization and compaction moisture content requirements are met. Initial compaction must be achieved with a vibratory pad-foot roller. A steel-wheel, flat-wheel or pneumatic roller shall not be used to achieve initial density, but the same may be used for **Finishing, Curing.**

The material shall be sprinkled as necessary to provide the required optimum moisture content. Compaction shall begin at the bottom and shall continue until the entire depth or mixture is uniformly compacted to the density required by the plans or the methods provided to the governing specifications.

All other subsequent courses treated under this item shall be compacted to a minimum of 95 percent of compaction ratio density at a moisture content between –1 and + 2% of OMC. The testing will be outlined in Test Method ASTM D698 or other approved methods. In addition to the requirements specific for density, the full depth of the material shown on the plans shall be compacted to the extent necessary to remain firm and stable under construction equipment. After each section is completed tests as

necessary will be requested by the Contractor. If the material fails to meet the density requirements, it shall be reworked as necessary to meet these requirements. Throughout this entire operation the shape of the course shall be maintained by blading, and the surface upon completion shall be smooth and in conformity with the typical section shown on the plans and to the established lines and grades. Should the material, due to any reason or cause, lose the required stability, density and finish before the next course is placed or the work is accepted, it shall be reprocessed and refinished at the expense of the Contractor to include retesting of all failures.

I. **Finishing, Curing:** All placing, compacting, and finishing operations shall be completed within the guidelines set forth in **Section 3** Construction Method of this specification. After compaction and within twenty-four (24) hours of placement, the surface shall be finished to grade and section by blading and shall be sealed with approved pneumatic or other suitable roller as approved by the Engineer. The complete section may then accept a surfacing as detailed elsewhere.

After finishing the section and prior to placement of the base course and/or surfacing as detailed elsewhere, the finished section shall be sprinkled with plain water as needed to maintain Optimum Moisture Content and to prevent cracking of the finished surface.

J. **Reworking a Section:** When a section is reworked within forty-eight (48) hours after completion, the Contractor shall at its own expense purchase more Roadbond EN 1 and reapply at the rate of one-half (1/2) of the original application rate to the effected area. However, the dilution ratio shall not exceed 200 to 1 and the Contractor shall mix and compact the material according to the specifications of the original application.
If the plans provide for the treated material to be sealed or covered by other courses of material such seal or course shall be applied within 3 days after compaction and testing by side lab unless otherwise directed by the Engineer.

4. JOB CONTROL AND TOLERANCES:

A. **Density Control:** The Roadbond EN 1 applied to the base and/or subgrade material shall follow the standard density test methods ASTM or ASTM as directed by the Engineer.

If the material fails to meet the density requirements or should the material loose the required stability, density or finish before the next course is placed or the project is accepted, it shall be reworked as set forth in Section 3. J of this specification.

B. **Density Tolerances:** The Engineer may accept the work providing that not more than one (1) of the most recent five (5) consecutive density test performed is below the specified density and provided that the falling test is no more than 80.74 lbs/CY below the specified density

Thickness Tolerance of Treated Subgrade: At no time during the mixing process shall the Contractor increase or decrease the depth of the subgrade section as detailed on the plans without the approval of the Engineer. If any deviation should occur, that section

shall be reworked according to construction operations and testing described in **Section** 3 J

4. MEASUREMENT:

This item will be measured as follows:
Liquid Stabilizer Products will be measured by the gallon

Liquid Stabilizer Treatment will be measured by the square yard of the depth specified to the lines and grades shown on the typical sections.

5. PAYMENT

The work performed and materials furnished I accordance with this Item and measured as provided under “Measurement” will be paid for as follows:

“Liquid Stabilizer” will be paid for at the unit price bid per gallon. This pricing shall be full compensation for furnishing all the liquid stabilizer products.

“Liquid Stabilizer Treatment” of the depth specified will be paid for at the unit price bid per square yard. This pricing shall be full compensation for shaping existing material, loosening, mixing, pulverizing, spreading, drying, testing, applying stabilizer treatment, dilution water for the stabilizer treatment, compacting, curing including curing materials, shaping and maintaining, processing, hauling, reworking if required, preparing secondary subgrade, and for all mixing water, tools, equipment, labor, and incidentals necessary to complete the work.

Work performed and materials furnished as prescribed by this specification and measured as provided under "Measurement" will be paid for the unit price bid stabilized base course, of the type specified, which price bid stabilized base course, of the type specified, which price shall be compensation for supplying the road bond, for all mixing, spreading, drying, application of the road bond, water content of spray, mixing water, shaping and maintaining, for all manipulations required, for all hauling and freight involved, for all tools, equipment, labor and for all incidentals necessary to satisfactorily complete the work, except as hereinafter specified.

Payment for the preparation of the subgrade will be measured and paid for in accordance with the pertinent stabilized base and base course bid items.

Measurement and payment for all items involved in constructing base or subbase courses, including sprinkling and rolling, compaction will be as provided in the governing base or subbase item as indicated above in payment.

ROADBOND EN 1 APPLICATION RATES

REQUIREMENTS: Roadbond EN 1 shall be stored and handled in closed, five (5) gallon weatherproof containers until immediate distribution on the road. Roadbond EN 1 materials must be stored in covered storage and well ventilated with adequate protection from flooding or damage. For mixing ease and safety round up to the nearest 5 gallon increments (i.e. 72 gallons up to 75 gallons). Follow strict application instructions.

Road Width in Feet	6" in Depth *.00056 GA/SY	8" in Depth *.00075 GA/SY	10" in Depth *.0089 GA/SY
20" wide road	66 gallons per mile	88 gallons per mile	104 gallons per mile
22" wide road	73 gallons per mile	97 gallons per mile	120 gallons per mile
24" wide road	80 gallons per mile	106 gallons per mile	132 gallons per mile
26" wide road	86 gallons per mile	115 gallons per mile	143 gallons per mile
28" wide road	93 gallons per mile	124 gallons per mile	154 gallons per mile
30" wide road	99 gallons per mile	132 gallons per mile	165 gallons per mile
Square yards treated/ gallon	180 square yards	135 square yards	108 square yards
Square yards treated/gallon (when using CTB)	171 square yards	128 square yards	103 square yards

**Use 5% more ROADBOND EN 1 than the chart calls for when treating Cement Treated Base. (Calculate 28.5 cubic yards per gallon)

***Application rate per square yard = $\frac{\text{Length (feet) C Width (feet)}}{9\ \text{SF}}$ X Appl. Rate

For more information contact:
Steve Merritt
Roadbond Service Company
(800) 541-3348
Steve@RoadbondSoil.com

SPECIAL SPECIFICATION
3268
Dense-Graded Hot-Mix Asphalt

1. **Description.** Construct a hot-mix asphalt (HMA) pavement layer composed of a compacted, dense-graded mixture of aggregate and asphalt binder mixed hot in a mixing plant. Pay adjustments will apply to HMA placed under this specification unless the HMA is deemed exempt in accordance with Section 3268.4.I.4, "Exempt Production."

2. **Materials.** Furnish uncontaminated materials of uniform quality that meet the requirements of the plans and specifications.

   Notify the Engineer of all material sources. Notify the Engineer before changing any material source or formulation. When the Contractor makes a source or formulation change, the Engineer will verify that the specification requirements are met and may require a new laboratory mixture design, trial batch, or both. The Engineer may sample and test project materials at any time during the project to verify specification compliance in accordance with Item 6, "Control of Materials."

   A. **Aggregate.** Furnish aggregates from sources that conform to the requirements shown in Table 1 and as specified in this Section. Aggregate requirements in this Section, including those shown in Table 1, may be modified or eliminated when shown on the plans. Additional aggregate requirements may be specified when shown on the plans. Provide aggregate stockpiles that meet the definitions in this Section for coarse, intermediate, or fine aggregate. Aggregate from reclaimed asphalt pavement (RAP) is not required to meet Table 1 requirements unless otherwise shown on the plans. Supply aggregates that meet the definitions in Tex-100-E for crushed gravel or crushed stone. The Engineer will designate the plant or the quarry as the sampling location. Samples must be from materials produced for the project. The Engineer will establish the surface aggregate classification (SAC) and perform Los Angeles abrasion, magnesium sulfate soundness, and Micro-Deval tests. Perform all other aggregate quality tests listed in Table 1. Document all test results on the mixture design report. The Engineer may perform tests on independent or split samples to verify Contractor test results. Stockpile aggregates for each source and type separately. Determine aggregate gradations for mixture design and production testing based on the washed sieve analysis given in Tex-200-F, Part II.

      1. **Coarse Aggregate.** Coarse aggregate stockpiles must have no more than 20% material passing the No. 8 sieve. Aggregate from sources listed in the Department's *Bituminous Rated Source Quality Catalog* (BRSQC) located at http://www.txdot.gov/business/resources/producer-list.html are preapproved for use.

For sources not listed on the Department's BRSQC:

- build an individual stockpile for each material;
- request the Department test the stockpile for specification compliance; and
- once approved, do not add material to the stockpile unless otherwise approved.

Use only the rated values for hot mix listed in the BRSQC. Rated values for surface treatment (ST) do not apply to coarse aggregate sources used in hot mix. Provide aggregate from non-listed sources only when tested by the Engineer and approved before use. Allow 30 calendar days for the Engineer to sample, test, and report results for non-listed sources.

Provide coarse aggregate with at least the minimum SAC as shown on the plans. SAC requirements apply only to aggregates used on the surface of travel lanes. SAC requirements apply to aggregates used on surfaces other than travel lanes when shown on the plans. The SAC for sources on the Department's Aggregate Quality Monitoring Program (AQMP) is listed in the BRSQC.

a. Blending Class A and Class B Aggregates. Class B aggregate meeting all other requirements in Table 1 may be blended with a Class A aggregate in order to meet requirements for Class A materials. When blending Class A and B aggregates to meet a Class A requirement, ensure that at least 50% by weight of the material retained on the No. 4 sieve comes from the Class A aggregate source. Blend by volume if the bulk specific gravities of the Class A and B aggregates differ by more than 0.300. For blending purposes, coarse aggregate from RAP and Recycled Asphalt Shingles (RAS) will be considered as Class B aggregate.

When the Contractor blends Class A and B aggregates to meet a Class A requirement, the Engineer may perform tests at any time during production to ensure that at least 50% by weight of the material retained on the No. 4 sieve comes from the Class A aggregate source. In such cases where the Engineer elects to verify conformance, the Engineer will use the Department's mix design Excel template to calculate the percent of Class A aggregate retained on the No. 4 sieve by inputting the bin percentages shown from readouts in the control room at the time of production and stockpile gradations measured at the time of production. The Engineer may determine the gradations based on either washed or dry sieve analysis from samples obtained from individual aggregate cold feed bins or aggregate stockpiles. The Engineer may perform spot checks using the gradations supplied by the Contractor on the mixture design report as an input for the Excel template; however, a failing spot check will require confirmation with a stockpile gradation determined by the Engineer.

b. Micro-Deval Abrasion. The Engineer will perform a minimum of one Micro-Deval abrasion test in accordance with Tex-461-A for each coarse aggregate source used in the mixture design that has a Rated Source Soundness

Magnesium (RSSM) loss value greater than 15 as listed in the BRSQC. The Engineer will perform testing prior to the start of production and may perform additional testing at any time during production. The Engineer may obtain the coarse aggregate samples from each coarse aggregate source or may require the Contractor to obtain the samples. The Engineer may elect to waive all Micro-Deval testing based on a satisfactory test history of the same aggregate source.

When tested, the Engineer will estimate the magnesium sulfate soundness loss for each coarse aggregate source using the following formula:

$Mg_{est.} = (RSSM)(MD_{act.}/RSMD)$

where:

Mg_{est} = magnesium sulfate soundness loss

MD_{act} = actual Micro-Deval percent loss

RSMD = Rated Source Micro-Deval

When the estimated magnesium sulfate soundness loss is greater than the maximum magnesium sulfate soundness loss specified, the coarse aggregate source will not be allowed for use unless otherwise approved by the Engineer. The Engineer will consult the Geotechnical, Soils, and Aggregates Branch of the Construction Division, and additional testing may be required prior to granting approval.

2. **Intermediate Aggregate.** Aggregates not meeting the definition of coarse or fine aggregate will be defined as intermediate aggregate. When used, supply intermediate aggregates that are free from organic impurities. The Engineer may test the intermediate aggregate in accordance with Tex-408-A to verify the material is free from organic impurities. When used, supply intermediate aggregate from coarse aggregate sources that meet the requirements shown in Table 1 unless otherwise approved.

   If 10% or more of the stockpile is retained on the No. 4 sieve, test the stockpile and verify that it meets the requirements in Table 1 for coarse aggregate angularity (Tex-460-A) and flat and elongated particles (Tex-280-F).

3. **Fine Aggregate.** Fine aggregates consist of manufactured sands, screenings, and field sands. Fine aggregate stockpiles must meet the gradation requirements in Table 2. Supply fine aggregates that are free from organic impurities. The Engineer may test the fine aggregate in accordance with Tex-408-A to verify the material is free from organic impurities. At most 15% of the total aggregate may be field sand or other uncrushed fine aggregate. With the exception of field sand, use fine aggregate from coarse aggregate sources that meet the requirements shown in Table 1 unless otherwise approved.

If 10% or more of the stockpile is retained on the No. 4 sieve, test the stockpile and verify that it meets the requirements in Table 1 for coarse aggregate angularity (Tex-460-A) and flat and elongated particles (Tex-280-F).

Table 1
Aggregate Quality Requirements

Property	Test Method	Requirement
Coarse Aggregate		
SAC	AQMP	As shown on plans
Deleterious material, %, max	Tex-217-F, Part I	1.5
Decantation, %, max	Tex-217-F, Part II	1.5
Micro-Deval abrasion, %, max	Tex-461-A	Note 1
Los Angeles abrasion, %, max	Tex-410-A	40
Magnesium sulfate soundness, 5 cycles, %, max	Tex-411-A	30
Coarse aggregate angularity, 2 crushed faces, %, min	Tex-460-A, Part I	85[2]
Flat and elongated particles @ 5:1, %, max	Tex-280-F	10
Fine Aggregate		
Linear shrinkage, %, max	Tex-107-E	3
Combined Aggregate[3]		
Sand equivalent, %, min	Tex-203-F	45

1. Used to estimate the magnesium sulfate soundness loss in accordance with Section 3268.2.A.1, "Coarse Aggregate."
2. Only applies to crushed gravel.
3. Aggregates, without mineral filler, RAP, RAS, or additives, combined as used in the job-mix formula (JMF).

Table 2
Gradation Requirements for Fine Aggregate

Sieve Size	% Passing by Weight or Volume
3/8"	100
#8	70–100
#200	0–30

B. Mineral Filler. Mineral filler consists of finely divided mineral matter, such as agricultural lime, crusher fines, hydrated lime, or fly ash. Mineral filler is allowed unless otherwise shown on the plans. Do not use more than 2% mineral hydrated lime unless otherwise shown on the plans. If a substitute binder is used, do not use more than 1% hydrated lime unless otherwise shown on the plans or allowed by the Engineer. Test all mineral fillers except hydrated lime and fly ash in accordance with Tex-107-E to ensure specification compliance. The plans may require or disallow specific mineral fillers. When used, provide mineral filler that:

- is sufficiently dry, free-flowing, and free from clumps and foreign matter;
- does not exceed 3% linear shrinkage when tested in accordance with Tex-107-E; and
- meets the gradation requirements in Table 3.

Table 3
Gradation Requirements for Mineral Filler

Sieve Size	% Passing by Weight or Volume
#8	100
#200	55–100

C. Baghouse Fines. Fines collected by the baghouse or other dust-collecting equipment may be reintroduced into the mixing drum.

D. Asphalt Binder. Furnish the type and grade of performance-graded (PG) asphalt specified on the plans.

E. Tack Coat. Furnish CSS-1H, SS-1H, or a PG binder with a minimum high-temperature grade of PG 58 for tack coat binder in accordance with Item 300, "Asphalts, Oils, and Emulsions." Specialized or preferred tack coat materials may be allowed by the Engineer or required when shown on the plans. Do not dilute emulsified asphalts at the terminal, in the field, or at any other location before use.

The Engineer will obtain at least one sample of the tack coat binder per project in accordance with Tex-500-C, Part III, and test it to verify compliance with Item 300. The Engineer will obtain the sample from the asphalt distributor immediately before use.

F. Additives. Use the type and rate of additive specified when shown on the plans. Other additives that facilitate mixing, compaction, or improve the quality of the mixture may be allowed when approved. Provide the Engineer with documentation such as the bill of lading showing the quantity of additives used in the project unless otherwise directed.

1. **Lime and Liquid Antistripping Agent.** When lime or a liquid antistripping agent is used, add in accordance with Item 301, "Asphalt Antistripping Agents." Do not add lime directly into the mixing drum of any plant where lime is removed through the exhaust stream unless the plant has a baghouse or dust collection system that reintroduces the lime into the drum.

2. **Warm Mix Asphalt (WMA).** Warm Mix Asphalt (WMA) is defined as HMA that is produced within a target temperature discharge range of 215ºF and 275ºF using Department-approved WMA additives or processes. The Department's Material Producer List of WMA additives and processes is located at http://www.txdot.gov/business/resources/producer-list.html.

   WMA is allowed for use on all projects and is required when shown on plans. The maximum placement or target discharge temperature for WMA may be set at a value less than 275ºF when shown on the plans.

   Department-approved WMA additives or processes may be used to facilitate mixing and compaction of HMA produced at target discharge temperatures greater than 275ºF; however, such mixtures will not be defined as WMA.

G. Recycled Materials. Use of RAP and RAS is permitted unless otherwise shown on the plans. Do not exceed the maximum allowable percentages of RAP and RAS shown in Table 4. The allowable percentages shown in Table 4 may be decreased or increased when shown on the plans. Determine asphalt content and gradation of the RAP and RAS stockpiles for mixture design purposes in accordance with Tex-236-F. The Engineer may verify the asphalt content of the stockpiles at any time during production. Perform other tests on RAP and RAS when shown on the plans. Asphalt binder from RAP and RAS is designated as recycled asphalt binder. When RAP or RAS is used, calculate and ensure that the ratio of the recycled asphalt binder to total binder does not

exceed the percentages shown in Table 5 during mixture design and HMA production. During HMA production, use a separate cold feed bin for each stockpile of RAP and RAS.

Surface, intermediate, and base mixes referenced in Tables 4 and 5 are defined as follows:

- "Surface" mixes are the final lift or riding surface of the pavement structure;
- "Intermediate" mixes are non-surface mixtures placed less than or equal to 8 inches from the riding surface; and
- "Base" mixes are non-surface mixtures placed greater than 8 inches from the riding surface.

1. RAP. RAP is salvaged, milled, pulverized, broken, or crushed asphalt pavement. Crush or break RAP so that 100% of the particles pass the 2 in. sieve.

Use of Contractor-owned RAP including HMA plant waste is permitted unless otherwise shown on the plans. Department-owned RAP stockpiles are available for the Contractor's use when the stockpile locations are shown on the plans. If Department-owned RAP is available for the Contractor's use, the Contractor may use Contractor-owned fractionated RAP and replace it with an equal quantity of Department-owned RAP. This allowance does not apply to a Contractor using unfractionated RAP. Department-owned RAP generated through required work on the Contract is available for the Contractor's use when shown on the plans. Perform any necessary tests to ensure Contractor- or Department-owned RAP is appropriate for use. The Department will not perform any tests or assume any liability for the quality of the Department-owned RAP unless otherwise shown on the plans. The Contractor will retain ownership of RAP generated on the project when shown on the plans.

Fractionated RAP is defined as having two or more RAP stockpiles, divided into coarse and fine fractions. The coarse RAP stockpile will contain only material retained by processing over a 3/8 in. screen or 1/2 in. screen unless otherwise approved. The fine RAP stockpile will contain only material passing the 3/8 in. screen or 1/2 in. screen unless otherwise approved. The Engineer may allow the Contractor to use an alternate to the 3/8 in. screen or 1/2 in. screen to fractionate the RAP. The maximum percentages of fractionated RAP may be comprised of coarse or fine fractionated RAP or the combination of both coarse and fine fractionated RAP.

Do not use Department- or Contractor-owned RAP contaminated with dirt or other objectionable materials. Do not use Department- or Contractor-owned RAP if the decantation value exceeds 5% and the plasticity index is greater than 8. Test the stockpiled RAP for decantation in accordance with Tex-406-A, Part I. Determine the plasticity index in accordance with Tex-106-E if the decantation value exceeds 5%. The decantation and plasticity index requirements do not apply to RAP samples with asphalt removed by extraction or ignition.

Do not intermingle Contractor-owned RAP stockpiles with Department-owned RAP stockpiles. Remove unused Contractor-owned RAP material from the project site upon completion of the project. Return unused Department-owned RAP to the designated stockpile location.

Table 4
Maximum Allowable Amounts of RAP[1]

Maximum Allowable Fractionated RAP[2] (%)			Maximum Allowable Unfractionated RAP[3] (%)		
Surface	**Intermediate**	**Base**	**Surface**	**Intermediate**	**Base**
20.0	30.0	40.0	10.0	10.0	10.0

1. Must also meet the recycled binder to total binder ratio shown in Table 5.
2. Up to 5% RAS may be used separately or as a replacement for fractionated RAP.
3. Unfractionated RAP may not be combined with fractionated RAP or RAS.

2. RAS. Use of post-manufactured RAS or post-consumer RAS (tear-offs) is permitted unless otherwise shown on the plans. Up to 5% RAS may be used separately or as a replacement for fractionated RAP in accordance with Table 4 and Table 5. RAS is defined as processed asphalt shingle material from manufacturing of asphalt roofing shingles or from re-roofing residential structures. Post-manufactured RAS is processed manufacturer's shingle scrap by-product. Post-consumer RAS is processed shingle scrap removed from residential structures. Comply with all regulatory requirements stipulated for RAS by the Texas Commission on Environmental Quality (TCEQ). RAS may be used separately or in conjunction with RAP.

Process the RAS by ambient grinding or granulating such that 100% of the particles pass the 3/8 in. sieve when tested in accordance with Tex-200-F, Part I. Perform a sieve analysis on processed RAS material prior to extraction (or ignition) of the asphalt.

Add sand meeting the requirements of Table 1 and Table 2 or fine RAP to RAS stockpiles if needed to keep the processed material workable. For any stockpile that contains RAS, the entire stockpile will be considered a RAS stockpile and be limited to no more than 5.0% of the HMA mixture in accordance with Table 4.

Certify compliance of the RAS with DMS-11000, "Evaluating and Using Nonhazardous Recyclable Materials (NRM) Guidelines." If the RAS has not come into contact with any hazardous materials, treat it as an established NRM. Use RAS from shingle sources on the Department's Material Producer List of NRM located at http://www.txdot.gov/business/resources/producer-list.html. Prior to use, remove substantially all materials that are not part of the shingle, such as wood, paper, metal, plastic, and felt paper. Determine the deleterious content of RAS material for mixture design purposes in accordance with Tex-217-F, Part III. Do not use RAS if deleterious materials are more than 0.5% of the stockpiled RAS unless otherwise approved. Submit a sample for approval to the Engineer prior to submitting the mixture design. The Department will perform the testing for deleterious material of RAS to determine specification compliance.

H. Substitute Binders. Unless otherwise shown on the plans, the Contractor may use a substitute PG binder listed in Table 5 in lieu of the PG binder originally specified, if the substitute PG binder and mixture made with the substitute PG binder meet the following:

- the substitute binder meets the specification requirements for the substitute binder grade in accordance with Section 300.2.J, "Performance-Graded Binders";
- the substitute binder has an un-aged dynamic shear value less than or equal to 2.00 kPa and an RTFO aged dynamic shear value less than or equal to 5.00 kPa at the PG test temperature; and
- the mixture has less than 10.0 mm of rutting on the Hamburg Wheel test (Tex-242-F) after the number of passes required for the originally specified binder. Use of substitute PG binders may only be allowed at the discretion of the Engineer if the Hamburg Wheel test results are between 10.0 mm and 12.5 mm.

Table 5
Allowable Substitute PG Binders and Maximum Recycled Binder Ratios

Originally Specified PG Binder	Allowable Substitute PG Binder	Maximum Ratio of Recycled Binder[1] to Total Binder (%)		
		Surface	Intermediate	Base
HMA				
76-22[2]	70-22 or 64-22	20.0	20.0	20.0
	70-28 or 64-28	30.0	35.0	40.0
70-22[2]	64-22	20.0	20.0	20.0
	64-28 or 58-28	30.0	35.0	40.0
64-22[2]	58-28	30.0	35.0	40.0
76-28[2]	70-28 or 64-28	20.0	20.0	20.0
	64-34	30.0	35.0	40.0
70-28[2]	64-28 or 58-28	20.0	20.0	20.0
	64-34 or 58-34	30.0	35.0	40.0
64-28[2]	58-28	20.0	20.0	20.0
	58-34	30.0	35.0	40.0
WMA[3]				
76-22[2]	70-22 or 64-22	30.0	35.0	40.0
70-22[2]	64-22 or 58-28	30.0	35.0	40.0
64-22[4]	58-28	30.0	35.0	40.0
76-28[2]	70-28 or 64-28	30.0	35.0	40.0
70-28[2]	64-28 or 58-28	30.0	35.0	40.0
64-28[4]	58-28	30.0	35.0	40.0

1. Combined recycled binder from RAP and RAS.
2. Use no more than 20.0% recycled binder when using this originally specified PG binder.
3. WMA as defined in Section 3268.2.F.2, "Warm Mix Asphalt (WMA)."
4. When used with WMA, this originally specified PG binder is allowed for use at the maximum recycled binder ratios shown in this table.

3. **Equipment.** Provide required or necessary equipment in accordance with Item 320, "Equipment for Asphalt Concrete Pavement."

4. **Construction.** Produce, haul, place, and compact the specified paving mixture. In addition to tests required by the specification, Contractors may perform other QC tests as deemed necessary. At any time during the project, the Engineer may perform production and placement tests as deemed necessary in accordance with Item 5, "Control of the Work." On or before the first day of paving, it is mandatory to schedule and participate in a pre-paving meeting with the Engineer unless otherwise shown on the plans.

   A. **Certification.** Personnel certified by the Hot Mix Asphalt Center Certification Program must conduct all mixture designs, sampling, and testing in accordance with Table 6. Supply the Engineer with a list of certified personnel and copies of their current certificates before beginning production and when personnel changes are made. Provide a mixture design that is developed and signed by a Level 2 certified specialist. Provide a Level 1A certified specialist at the plant during production operations. Provide a Level 1B certified specialist to conduct placement tests.

Table 6
Test Methods, Test Responsibility, and Minimum Certification Levels

Test Description	Test Method	Contractor	Engineer	Level
1. Aggregate and Recycled Material Testing				
Sampling	Tex-400-A	✓	✓	1A
Dry sieve	Tex-200-F, Part I	✓	✓	1A
Washed sieve	Tex-200-F, Part II	✓	✓	1A
Deleterious material	Tex-217-F, Parts I & III	✓	✓	1A
Decantation	Tex-217-F, Part II	✓	✓	1A
Los Angeles abrasion	Tex-410-A		✓	
Magnesium sulfate soundness	Tex-411-A		✓	
Micro-Deval abrasion	Tex-461-A		✓	
Coarse aggregate angularity	Tex-460-A	✓	✓	2
Flat and elongated particles	Tex-280-F	✓	✓	2
Linear shrinkage	Tex-107-E	✓	✓	2
Sand equivalent	Tex-203-F	✓	✓	2
Organic impurities	Tex-408-A	✓	✓	2
2. Asphalt Binder & Tack Coat Sampling				
Asphalt binder sampling	Tex-500-C, Part II	✓	✓	1A/1B
Tack coat sampling	Tex-500-C, Part III	✓	✓	1A/1B
3. Mix Design & Verification				
Design and JMF changes	Tex-204-F	✓	✓	2
Mixing	Tex-205-F	✓	✓	2
Molding (TGC)	Tex-206-F	✓	✓	1A
Molding (SGC)	Tex-241-F	✓	✓	1A
Laboratory-molded density	Tex-207-F	✓	✓	1A
VMA[1] (calculation only)	Tex-204-F	✓	✓	2
Rice gravity	Tex-227-F	✓	✓	1A
Ignition oven correction factors[2]	Tex-236-F	✓	✓	2
Indirect tensile strength	Tex-226-F	✓	✓	2
Hamburg wheel test	Tex-242-F	✓	✓	2
Boil test	Tex-530-C	✓	✓	1A
4. Production Testing				
Selecting random numbers	Tex-225-F, Part I		✓	1A
Mixture sampling	Tex-222-F	✓	✓	1A
Molding (TGC)	Tex-206-F	✓	✓	1A
Molding (SGC)	Tex-241-F	✓	✓	1A
Laboratory-molded density	Tex-207-F	✓	✓	1A
VMA[1] (calculation only)	Tex-204-F	✓	✓	1A
Rice gravity	Tex-227-F	✓	✓	1A
Gradation & asphalt content[2]	Tex-236-F	✓	✓	1A
Control charts	Tex-233-F	✓	✓	1A
Moisture content	Tex-212-F	✓	✓	1A
Hamburg Wheel test	Tex-242-F	✓	✓	2
Micro-Deval abrasion	Tex-461-A		✓	
Boil test	Tex-530-C	✓	✓	1A
Aging ratio	Tex-211-F		✓	
Overlay test	Tex-248-F		✓	
Cantabro loss	Tex-245-F		✓	
5. Placement Testing				
Selecting random numbers	Tex-225-F, Part II		✓	1A/1B
Trimming roadway cores	Tex-207-F	✓	✓	1A/1B
In-place air voids	Tex-207-F	✓	✓	1A/1B
Establish rolling pattern	Tex-207-F	✓		1B
Control charts	Tex-233-F	✓	✓	1A
Ride quality measurement	Tex-1001-S	✓	✓	Note 3
Segregation (density profile)	Tex-207-F, Part V	✓	✓	1B
Longitudinal joint density	Tex-207-F, Part VII	✓	✓	1B
Thermal profile	Tex-244-F	✓	✓	1B

1. Voids in mineral aggregates.
2. Refer to Section 3268.4.I.2.c for exceptions to using an ignition oven.
3. Profiler and operator are required to be certified at the Texas Transportation Institute facility when Surface Test Type B is specified.

B. Reporting and Responsibilities. Use Department-provided Excel templates to record and calculate all test data including but not limited to mixture design, production and placement QC/QA, control charts, thermal profiles, segregation density profiles, and longitudinal joint density. Obtain the latest version of the Excel templates at http://www.txdot.gov/inside-txdot/forms-publications/consultants-contractors/forms/site-manager.html or from the Engineer. The Engineer and the Contractor will provide any available test results to the other party when requested. The maximum allowable time for the Contractor and Engineer to exchange test data is as given in Table 7 unless otherwise approved. The Engineer and the Contractor will immediately report to the other party any test result that requires suspension of production or placement, a payment penalty, or that fails to meet the specification requirements. Record and submit all test results and pertinent information on Department-provided Excel templates to the Engineer electronically by means of a portable USB flash drive, compact disc, or via email.

Subsequent sublots placed after test results are available to the Contractor, which require suspension of operations, may be considered unauthorized work. Unauthorized work will be accepted or rejected at the discretion of the Engineer in accordance with Section 5.3, "Conformity with Plans, Specifications, and Special Provisions."

Table 7
Reporting Schedule

Description	Reported By	Reported To	To Be Reported Within
Production Quality Control			
Gradation[1] Asphalt content[1] Laboratory-molded density[2] Moisture content[3] Boil test[3]	Contractor	Engineer	1 working day of completion of the sublot
Production Quality Assurance			
Gradation[3] Asphalt content[3] Laboratory-molded density[1] Hamburg wheel test[2] Boil test[3] Binder tests[2]	Engineer	Contractor	1 working day of completion of the sublot
Placement Quality Control			
In-place air voids[2] Segregation[1] Longitudinal joint density[1] Thermal profile[1]	Contractor	Engineer	1 working day of completion of the lot
Placement Quality Assurance			
In-place air voids[1] Segregation[2] Longitudinal joint density[2] Thermal profile[2] Aging ratio[2]	Engineer	Contractor	1 working day of receipt of the trimmed cores for in-place air voids[4]
Pay adjustment summary	Engineer	Contractor	2 working days of performing all required tests and receiving Contractor test data

1. These tests are required on every sublot.
2. Optional test. To be reported as soon as results become available.
3. To be performed at the frequency specified on the plans.
4. 2 days are allowed if cores cannot be dried to constant weight within 1 day.

The Engineer will use the Department-provided Excel template to calculate all pay adjustment factors for the lot. Sublot samples may be discarded after the Engineer and Contractor sign off on the pay adjustment summary documentation for the lot.

Use the procedures described in Tex-233-F to plot the results of all quality control (QC) and quality assurance (QA) testing. Update the control charts as soon as test results for each sublot become available. Make the control charts readily accessible at the field laboratory. The Engineer may suspend production for failure to update control charts.

C. Quality Control Plan (QCP). Develop and follow the QCP in detail. Obtain approval from the Engineer for changes to the QCP made during the project. The Engineer may suspend operations if the Contractor fails to comply with the QCP.

Submit a written QCP to the Engineer before the mandatory pre-paving meeting. Receive the Engineer's approval of the QCP before beginning production. Include the following items in the QCP:

1. **Project Personnel.** For project personnel, include:
   - a list of individuals responsible for QC with authority to take corrective action;
   - contact information for each individual listed; and
   - copies of certification documents for individuals performing specified QC functions.

2. **Material Delivery and Storage.** For material delivery and storage, include:
   - the sequence of material processing, delivery, and minimum quantities to assure continuous plant operations;
   - aggregate stockpiling procedures to avoid contamination and segregation;
   - frequency, type, and timing of aggregate stockpile testing to assure conformance of material requirements before mixture production; and
   - procedure for monitoring the quality and variability of asphalt binder.

3. **Production.** For production, include:
   - loader operation procedures to avoid contamination in cold bins;
   - procedures for calibrating and controlling cold feeds;
   - procedures to eliminate debris or oversized material;
   - procedures for adding and verifying rates of each applicable mixture component (e.g., aggregate, asphalt binder, RAP, RAS, lime, liquid antistrip);
   - procedures for reporting job control test results; and
   - procedures to avoid segregation and drain-down in the silo.

4. **Loading and Transporting.** For loading and transporting, include:
   - type and application method for release agents; and
   - truck loading procedures to avoid segregation.

5. **Placement and Compaction.** For placement and compaction, include:

- proposed agenda for mandatory pre-paving meeting, including date and location;
- proposed paving plan (e.g., paving widths and lift thicknesses);
- type and application method for release agents in the paver and on rollers, shovels, lutes, and other utensils;
- procedures for the transfer of mixture into the paver, while avoiding segregation and preventing material spillage;
- process to balance production, delivery, paving, and compaction to achieve continuous placement operations and good ride quality;
- paver operations (e.g., operation of wings, height of mixture in auger chamber) to avoid physical and thermal segregation and other surface irregularities; and
- procedures to construct quality longitudinal and transverse joints.

D. Mixture Design.

1. **Design Requirements**. The Contractor may elect to design the mixture using a Texas Gyratory Compactor (TGC) or a Superpave Gyratory Compactor (SGC) unless otherwise shown on the plans. Use the typical weight design example given in Tex-204-F, Part I, when using a TGC. Use the Superpave mixture design procedure given in Tex-204-F, Part IV, when using a SGC. Design the mixture to meet the requirements listed in Tables 1, 2, 3, 4, 5, 8, 9, and 10.

   a. **Target Laboratory Molded Density When The TGC Is Used.** Design the mixture at a 96.5% target laboratory-molded density or as noted in Table 9. The target laboratory-molded density may be increased in 0.5% increments, not to exceed 97.0%, at the Contractor's discretion.

   b. **Design Number of Gyrations (Ndesign) When The SGC Is Used.** Design the mixture at 50 gyrations (Ndesign). Use a target laboratory-molded density of 96.0% to design the mixture; however, adjustments can be made to the Ndesign value as noted in Table 9. The Ndesign level may be reduced to no less than 35 gyrations at the Contractor's discretion.

   Use an approved laboratory to perform the Hamburg Wheel test and provide results with the mixture design, or provide the laboratory mixture and request that the Department perform the Hamburg Wheel test. The Department maintains the Material Producer List of approved laboratories located at http://www.txdot.gov/business/resources/producer-list.html. The Engineer will be allowed 10 working days to provide the Contractor with Hamburg Wheel test results on the laboratory mixture design.

   The Engineer will provide the mixture design when shown on the plans. The Contractor may submit a new mixture design at any time during the project. The Engineer will verify and approve all mixture designs (JMF1) before the Contractor can begin production.

Provide the Engineer with a mixture design report using the Department-provided Excel template. Include the following items in the report:

- the combined aggregate gradation, source, specific gravity, and percent of each material used;
- asphalt content and aggregate gradation of RAP and RAS stockpiles;
- the target laboratory-molded density (or Ndesign level when using the SGC);
- results of all applicable tests;
- the mixing and molding temperatures;
- the signature of the Level 2 person or persons that performed the design;
- the date the mixture design was performed; and
- a unique identification number for the mixture design.

Table 8
Master Gradation Limits (% Passing by Weight or Volume) and VMA Requirements

Sieve Size	A Coarse Base	B Fine Base	C Coarse Surface	D Fine Surface	F Fine Mixture
2"	100.0[1]	–	–	–	–
1-1/2"	98.0–100.0	100.0[1]	–	–	–
1"	78.0–94.0	98.0–100.0	100.0[1]	–	–
3/4"	64.0–85.0	84.0–98.0	95.0–100.0	100.0[1]	–
1/2"	50.0–70.0	–	–	98.0–100.0	100.0[1]
3/8"	–	60.0–80.0	70.0–85.0	85.0–100.0	98.0–100.0
#4	30.0–50.0	40.0–60.0	43.0–63.0	50.0–70.0	70.0–90.0
#8	22.0–36.0	29.0–43.0	32.0–44.0	35.0–46.0	38.0–48.0
#30	8.0–23.0	13.0–28.0	14.0–28.0	15.0–29.0	12.0–27.0
#50	3.0–19.0	6.0–20.0	7.0–21.0	7.0–20.0	6.0–19.0
#200	2.0–7.0	2.0–7.0	2.0–7.0	2.0–7.0	2.0–7.0
Design VMA, % Minimum					
–	12.0	13.0	14.0	15.0	16.0
Production (Plant-Produced) VMA, % Minimum					
–	11.0	12.0	13.0	14.0	15.0

1. Defined as maximum sieve size. No tolerance allowed.

Table 9
Laboratory Mixture Design Properties

Mixture Property	Test Method	Requirement
Target laboratory-molded density, % (TGC)	Tex-207-F	96.5[1]
Design gyrations (Ndesign for SGC)	Tex-241-F	50[2]
Indirect tensile strength (dry), psi	Tex-226-F	85–200[3]
Boil test[4]	Tex-530-C	–

1. May be adjusted in 0.5% increments within a range of 96.0% to 97.5% when shown on the plans or specification or when mutually agreed between the Engineer and Contractor.
2. May be adjusted within a range of 35–100 gyrations when shown on the plans or specification or when mutually agreed between the Engineer and Contractor.
3. The Engineer may allow the IDT strength to exceed 200 psi if the corresponding Hamburg Wheel rut depth is greater than 3.0 mm and less than 12.5 mm.
4. Used to establish baseline for comparison to production results. May be waived when approved.

Table 10
Hamburg Wheel Test Requirements

High-Temperature Binder Grade	Test Method	Minimum # of Passes[1] @ 12.5 mm[2] Rut Depth, Tested @ 50°C
PG 64 or lower	Tex-242-F	10,000
PG 70		15,000
PG 76 or higher		20,000

1. May be decreased or waived when shown on the plans.
2. When the rut depth at the required minimum number of passes is less than 3 mm, the Engineer may require the Contractor to increase the target laboratory-molded density (TGC) by 0.5% to no more than 97.5% or lower the Ndesign level (SGC) to no less than 35 gyrations.

2. Job-Mix Formula Approval. The job-mix formula (JMF) is the combined aggregate gradation, target laboratory molded density (or Ndesign level), and target asphalt percentage used to establish target values for hot mix production. JMF1 is the original laboratory mixture design used to produce the trial batch. When WMA is used, JMF1 may be designed and submitted to the Engineer without including the WMA additive. When WMA is used, document the additive or process used and recommend rate on the JMF1 submittal. The Engineer and the Contractor will verify JMF1 based on plant-produced mixture from the trial batch unless otherwise approved. The Engineer may accept an existing mixture design previously used on a Department project and may waive the trial batch to verify JMF1. The Department may require the Contractor to reimburse the Department for verification tests if more than two trial batches per design are required.

a. Contractor's Responsibilities.

(1) Providing Gyratory Compactor. Use a TGC calibrated in accordance with Tex-914-K when electing or required to design the mixture in accordance with Tex-204-F, Part I, for molding production samples. Furnish an SGC calibrated in accordance with Tex-241-F when electing or required to design the mixture in accordance with Tex-204-F, Part IV, for molding production samples. If the SGC is used, locate the SGC at the Engineer's field laboratory and make the SGC available to the Engineer for use in molding production samples.

(2) Gyratory Compactor Correlation Factors. Use Tex-206-F, Part II, to perform a gyratory compactor correlation when the Engineer uses a different gyratory compactor. Apply the correlation factor to all subsequent production test results.

(3) Submitting JMF1. Furnish the Engineer a mix design report (JMF1) with representative samples of all component materials and request approval to produce the trial batch. If opting to have the Department perform the Hamburg Wheel test on the laboratory mixture, provide the Engineer with approximately 10,000 g of the design mixture and request that the Department perform the Hamburg Wheel test.

(4) Supplying Aggregate. Provide the Engineer with approximately 40 lb. of each aggregate stockpile unless otherwise directed.

(5) Supplying Asphalt. Provide the Engineer at least 1 gal. of the asphalt material and sufficient quantities of any additives proposed for use.

(6) Ignition Oven Correction Factors. Determine the aggregate and asphalt correction factors from the ignition oven in accordance with Tex-236-F. Prior to the trial batch production, provide the Engineer with split samples of the mixtures, including all additives (except water), and blank samples used to determine the correction factors for the ignition oven used for quality assurance testing during production. Correction factors established from a previously approved mixture design may be used for the current mixture design, if the mixture design and ignition oven are the same as previously used unless otherwise directed.

(7) Boil Test. Perform the test and retain the tested sample from Tex-530-C until completion of the project or as directed by the Engineer. Use this sample for comparison purposes during production. The Engineer may waive the requirement for the boil test.

(8) Trial Batch Production. Upon receiving conditional approval of JMF1 and authorization from the Engineer to produce a trial batch, provide a plant-produced trial batch, including the WMA additive or process, if applicable, for verification testing of JMF1 and development of JMF2. Produce a trial batch mixture that meets the requirements in Table 4, Table 5, and Table 11. In lieu of a new trial batch, the Engineer may accept test results from recent production of the same mixture.

(9) Trial Batch Production Equipment. To produce the trial batch, use only equipment and materials proposed for use on the project.

(10) Trial Batch Quantity. Produce enough quantity of the trial batch to ensure that the mixture meets the specification requirements.

(11) Number of Trial Batches. Produce trial batches as necessary to obtain a mixture that meets the specification requirements.

(12) Trial Batch Sampling. Obtain a representative sample of the trial batch and split it into three equal portions, in accordance with Tex-222-F. Label these portions as “Contractor,” “Engineer,” and “Referee.” Deliver samples to the appropriate laboratory as directed.

(13) Trial Batch Testing. Test the trial batch to ensure that the mixture produced using the proposed JMF1 meets the mixture requirements in Table 11. The trial batch mixture must also be in compliance with the Hamburg Wheel requirement in Table 10. Use an approved laboratory to perform the Hamburg Wheel test on the trial batch mixture or request that the Department perform the Hamburg Wheel test. The Engineer will be allowed 10 working days to provide the Contractor with Hamburg Wheel

test results on the trial batch. Provide the Engineer with a copy of the trial batch test results.

(14) Development of JMF2. After the Engineer grants full approval of JMF1 based on results from the trial batch, evaluate the trial batch test results, determine the optimum mixture proportions, and submit as JMF2. Adjust the asphalt content or gradation to achieve the specified target laboratory-molded density. The asphalt content established for JMF2 is not required to be within any tolerance of the optimum asphalt content established for JMF1; however, mixture produced using JMF2 must meet the voids in mineral aggregates (VMA) requirements for production shown in Table 8. If the optimum asphalt content for JMF2 is more than 0.5% lower than the optimum asphalt content for JMF1, the Engineer may perform or require the Contractor to perform Tex-226-F on Lot 1 production to confirm the indirect tensile strength does not exceed 200 psi. Verify that JMF2 meets the mixture requirements in Table 5.

(15) Mixture Production. After receiving approval for JMF2 and receiving a passing result from the Department's or a Department-approved laboratory's Hamburg Wheel test on the trial batch, use JMF2 to produce Lot 1 as described in Section 3268.4.I.3.a.(1), "Lot 1 Placement." As an option, once JMF2 is approved, proceed to Lot 1 production at the Contractor's risk without receiving the results from the Department's Hamburg Wheel test on the trial batch.

If electing to proceed without Hamburg Wheel test results from the trial batch, notify the Engineer. Note that the Engineer may require up to the entire sublot of any mixture failing the Hamburg Wheel test to be removed and replaced at the Contractor's expense.

(16) Development of JMF3. Evaluate the test results from Lot 1, determine the optimum mixture proportions, and submit as JMF3 for use in Lot 2.

(17) JMF Adjustments. If necessary, adjust the JMF before beginning a new lot. The adjusted JMF must:

- be provided to the Engineer in writing before the start on a new lot;
- be numbered in sequence to the previous JMF;
- meet the mixture requirements in Table 4 and Table 5;
- meet the master gradation limits shown in Table 8; and
- be within the operational tolerances of JMF2 listed in Table 11.

(18) Requesting Referee Testing. If needed, use referee testing in accordance with Section 3268.4.I.1, "Referee Testing," to resolve testing differences with the Engineer.

Table 11
Operational Tolerances

Description	Test Method	Allowable Difference Between Trial Batch and JMF1 Target	Allowable Difference from Current JMF Target	Allowable Difference between Contractor and Engineer[1]
Individual % retained for #8 sieve and larger	Tex-200-F or Tex-236-F	Must be Within Master Grading Limits in Table 8	±5.0[2,3]	±5.0
Individual % retained for sieves smaller than #8 and larger than #200			±3.0[2,3]	±3.0
% passing the #200 sieve			±2.0[2,3]	±1.6
Asphalt content, %	Tex-236-F	±0.5	±0.3[3]	±0.3
Laboratory-molded density, %	Tex-207-F	±1.0	±1.0	±1.0
In-place air voids, %		N/A	N/A	±1.0
Laboratory-molded bulk specific gravity		N/A	N/A	±0.020
VMA, %, min	Tex-204-F	Note 4	Note 4	N/A
Theoretical maximum specific (Rice) gravity	Tex-227-F	N/A	N/A	±0.020

1. Contractor may request referee testing only when values exceed these tolerances.
2. When within these tolerances, mixture production gradations may fall outside the master grading limits; however, the % passing the #200 will be considered out of tolerance when outside the master grading limits.
3. Only applies to mixture produced for Lot 1 and higher.
4. Test and verify that Table 8 requirements are met.

b. Engineer's Responsibilities.

(1) Gyratory Compactor. For mixtures designed in accordance with Tex-204-F, Part I, the Engineer will use a Department TGC, calibrated in accordance with Tex-914-K, to mold samples for trial batch and production testing. The Engineer will make the Department TGC and the Department field laboratory available to the Contractor for molding verification samples, if requested by the Contractor.

For mixtures designed in accordance with Tex-204-F, Part IV, the Engineer will use a Department SGC, calibrated in accordance with Tex-241-F, to mold samples for laboratory mixture design verification. For molding trial batch and production specimens, the Engineer will use the Contractor-provided SGC at the field laboratory or provide and use a Department SGC at an alternate location. The Engineer will make the Contractor-provided SGC in the Department field laboratory available to the Contractor for molding verification samples.

(2) Conditional Approval of JMF1 and Authorizing Trial Batch. Within 2 working days of receiving the mixture design report (JMF1) and all required materials and Contractor-provided Hamburg Wheel test results, the Engineer will review the Contractor's mix design report and verify conformance with all aggregates, asphalt, additives, recycled materials, and mixture specifications. The Engineer will grant the Contractor conditional approval of JMF1, if the information provided on the paper copy of JMF1 indicates that the Contractor's mixture design meets the specifications. When the Contractor does not provide Hamburg Wheel test results with laboratory mixture design, 10 working days is allowed for

conditional approval of JMF 1. The Engineer will base full approval of JMF1 on test results on mixture from the trial batch.

Unless waived, the Engineer will determine the Micro-Deval abrasion loss in accordance with Section 3268.2.A.1.b, "Micro-Deval Abrasion." If the Engineer's test results are pending after 2 working days, conditional approval of JMF1 will still be granted within 2 working days of receiving JMF1. When the Engineer's test results become available, they will be used for specification compliance.

After conditionally approving JMF1, including either Contractor- or Department-supplied Hamburg Wheel test results, the Contractor is authorized to produce a trial batch.

(3) Hamburg Wheel Testing of JMF1. If the Contractor requests the option to have the Department perform the Hamburg Wheel test on the laboratory mixture, the Engineer will mold samples in accordance with Tex-242-F to verify compliance with the Hamburg Wheel test requirement in Table 10.

(4) Ignition Oven Correction Factors. The Engineer will use the split samples provided by the Contractor to determine the aggregate and asphalt correction factors for the ignition oven used for quality assurance testing during production in accordance with Tex-236-F.

(5) Testing the Trial Batch. Within 1 full working day, the Engineer will sample and test the trial batch to ensure that the mixture meets the requirements in Table 11. If the Contractor requests the option to have the Department perform the Hamburg Wheel test on the trial batch mixture, the Engineer will mold samples in accordance with Tex-242-F to verify compliance with the Hamburg Wheel test requirement in Table 10.

The Engineer will have the option to perform the following tests on the trial batch:

- Tex-226-F, to verify that the indirect tensile strength meets the requirement shown in Table 9; and
- Tex-530-C, to retain and use for comparison purposes during production.

(6) Full Approval of JMF1. The Engineer will grant full approval of JMF1 and authorize the Contractor to proceed with developing JMF2 if the Engineer's results for the trial batch meet the requirements in Table 11. The Engineer will notify the Contractor that an additional trial batch is required if the trial batch does not meet these requirements.

(7) Approval of JMF2. The Engineer will approve JMF2 within 1 working day if the mixture meets the requirements in Table 5 and the gradation meets the master grading limits shown in Table 8. The asphalt content established for JMF2 is not required to be within any tolerance of the optimum asphalt content established for JMF1; however, mixture

produced using JMF2 must meet the VMA requirements shown in Table 8. If the optimum asphalt content for JMF2 is more than 0.5% lower than the optimum asphalt content for JMF1, the Engineer may perform or require the Contractor to perform Tex-226-F on Lot 1 production to confirm the indirect tensile strength does not exceed 200 psi.

(8) Approval of Lot 1 Production. The Engineer will authorize the Contractor to proceed with Lot 1 production (using JMF2) as soon as a passing result is achieved from the Department's or a Department-approved laboratory's Hamburg Wheel test on the trial batch. The Contractor may proceed at its own risk with Lot 1 production without the results from the Hamburg Wheel test on the trial batch.

If the Department's or Department-approved laboratory's sample from the trial batch fails the Hamburg Wheel test, the Engineer will suspend production until further Hamburg Wheel tests meet the specified values. The Engineer may require up to the entire sublot of any mixture failing the Hamburg Wheel test be removed and replaced at the Contractor's expense.

(9) Approval of JMF3 and Subsequent JMF Changes. JMF3 and subsequent JMF changes are approved if they meet the mixture requirements shown in Table 4, Table 5, the master grading limits shown in Table 8, and are within the operational tolerances of JMF2 shown in Table 11.

E. Production Operations. Perform a new trial batch when the plant or plant location is changed. Take corrective action and receive approval to proceed after any production suspension for noncompliance to the specification. Submit a new mix design and perform a new trial batch when the asphalt content of:

- either RAP stockpile used in the mix is more than 0.5% higher than the value shown on the mixture design report; or
- RAS stockpile used in the mix is more than 2.0% higher than the value shown on the mixture design report.

1. Storage and Heating of Materials. Do not heat the asphalt binder above the temperatures specified in Item 300, "Asphalts, Oils, and Emulsions," or outside the manufacturer's recommended values. On a daily basis, provide the Engineer with the records of asphalt binder and hot-mix asphalt discharge temperatures (in legible and discernible increments) in accordance with Item 320, "Equipment for Asphalt Concrete Pavement." Do not store mixture for a period long enough to affect the quality of the mixture, nor in any case longer than 12 hr unless otherwise approved.

2. Mixing and Discharge of Materials. Notify the Engineer of the target discharge temperature and produce the mixture within 25°F of the target. Monitor the temperature of the material in the truck before shipping to ensure that it does not exceed 350°F (or 275ºF for WMA) and is not lower than 215°F. The Department will not pay for or allow placement of any mixture produced at more than 350°F.

When WMA is required, produce the WMA within the target temperature discharge range of 215ºF and 275ºF. Take corrective action any time the discharge temperature of the WMA exceeds the target discharge range. The Engineer may suspend production operations if the Contractor's corrective action is not successful at controlling the production temperature within the target discharge range. Note that when WMA is produced, it may be necessary to adjust burners to ensure complete combustion such that no burner fuel residue remains in the mixture.

Control the mixing time and temperature so that substantially all moisture is removed from the mixture before discharging from the plant. If requested, determine the moisture content by oven-drying in accordance with Tex-212-F, Part II, and verify that the mixture contains no more than 0.2% of moisture by weight. Obtain the sample immediately after discharging the mixture into the truck, and perform the test promptly.

F. Hauling Operations. Before use, clean all truck beds to ensure that mixture is not contaminated. When a release agent is necessary, use a release agent on the Department's Material Producer List to coat the inside bed of the truck.

Use only equipment for hauling as defined in Section 3268.4.G.3.c, "Hauling Equipment." Other hauling equipment may be used when allowed by the Engineer.

G. Placement Operations. Collect haul tickets from each load of mixture delivered to the project and provide the Department's copy to the Engineer approximately every hour, or as directed by the Engineer. When the Pave-IR system is not used for specification compliance, use a non-contact infrared thermometer to measure and record the internal temperature of the mixture as discharged from the truck or material transfer device prior to or as the mix enters the paver and an approximate station number or GPS coordinates on each ticket. Calculate the daily yield and cumulative yield for the specified lift and provide to the Engineer at the end of paving operations for each day unless otherwise directed. The Engineer may suspend production if the Contractor fails to produce and provide haul tickets and yield calculations by the end of paving operations for each day.

Prepare the surface by removing raised pavement markers and objectionable material such as moisture, dirt, sand, leaves, and other loose impediments from the surface before placing mixture. Remove vegetation from pavement edges. Place the mixture to meet the typical section requirements and produce a smooth, finished surface with a uniform appearance and texture. Offset longitudinal joints of successive courses of hot mix by at least 6 in. Place mixture so that longitudinal joints on the surface course coincide with lane lines, or as directed. Ensure that all finished surfaces will drain properly. Place the mixture at the rate or thickness shown on the plans. The Engineer will use the guidelines in Table 12 to determine the compacted lift thickness of each layer when multiple lifts are required. The thickness determined is based on the rate of 110 lb./sq. yd. for each inch of pavement unless otherwise shown on the plans.

Table 12
Compacted Lift Thickness and Required Core Height

Mixture Type	Compacted Lift Thickness Guidelines		Minimum Untrimmed Core Height (in.) Eligible for Testing
	Minimum (in.)	Maximum (in.)	
A	3.00	6.00	2.00
B	2.50	5.00	1.75
C	2.00	4.00	1.50
D	1.50	3.00	1.25
F	1.25	2.50	1.25

1. Weather Conditions.

a. When Using a Pave-IR System for Specification Compliance. The Contractor may pave any time the roadway is dry and the roadway surface temperature is at least 32°F; however, the Engineer may restrict the Contractor from paving surface mixtures if the ambient temperature is likely to drop below 32°F within 12 hours of paving. Operate the Pave-IR system in accordance with Tex-244-F and demonstrate to the Engineer that no recurring severe thermal segregation exists. Provide the Engineer with the automated report described in Tex-244-F on a daily basis unless otherwise directed.

b. When Not Using a Pave-IR System for Specification Compliance. Place mixture when the roadway surface temperature is equal to or higher than the temperatures listed in Table 13 unless otherwise approved or as shown on the plans. Measure the roadway surface temperature with a handheld infrared thermometer. The Engineer may allow mixture placement to begin prior to the roadway surface reaching the required temperature requirements, if conditions are such that the roadway surface will reach the required temperature within 2 hours of beginning placement operations. Place mixtures only when weather conditions and moisture conditions of the roadway surface are suitable in the opinion of the Engineer. The Engineer may restrict the Contractor from paving if the ambient temperature is likely to drop below 32°F within 12 hours of paving.

Table 13
Minimum Pavement Surface Temperatures

	Minimum Pavement Surface Temperatures in Degrees Fahrenheit	
Originally Specified High Temperature Binder Grade	Subsurface Layers or Night Paving Operations	Surface Layers Placed in Daylight Operations
PG 64 or lower	45	50
PG 70	55[1]	60[1]
PG 76 or higher	60[1]	60[1]

1. Contractors may pave at temperatures 10°F lower than these values when utilizing a paving process including WMA or equipment that eliminates thermal segregation. In such cases, the Contractor must use either a hand held thermal camera or a hand held infrared thermometer operated in accordance with Tex-244-F to demonstrate to the satisfaction of the Engineer that the uncompacted mat has no more than 10°F of thermal segregation.

2. **Tack Coat.** Clean the surface before placing the tack coat. Unless otherwise approved, apply tack coat uniformly at the rate directed by the Engineer. The Engineer will set the rate between 0.04 and 0.10 gal. of residual asphalt per square yard of surface area. Apply the tack coat in a uniform manner to avoid streaks and other irregular patterns. Apply a thin, uniform tack coat to all contact surfaces of curbs, structures, and all joints. Allow adequate time for emulsion to break completely prior to placing any material. Prevent splattering of tack coat when placed adjacent to curb, gutter, and structures. Roll the tack coat with a pneumatic-tire roller to remove streaks and other irregular patterns when directed.

3. **Lay-Down Operations.**

   a. **Thermal Profile.** Use a thermal camera or an infrared thermometer to obtain thermal profiles on each sublot in accordance with Tex-244-F. When the Pave-IR system is not used for specification compliance, the Engineer will obtain a thermal profile at least once per project. Thermal profiles are not applicable in areas described in Section 3268.4.I.3.a(4), "Miscellaneous Areas."

      Within 1 working day of the completion of each lot, provide the Engineer with the thermal profile of every sublot within the lot. Report the results of each thermal profile in accordance with Section 3268.4.B, "Reporting and Responsibilities."

      (1) **Moderate Thermal Segregation.** Any areas that have a temperature differential greater than 25°F but not exceeding 50°F are deemed as having moderate thermal segregation. Take immediate corrective action to eliminate the moderate thermal segregation. Evaluate areas with moderate thermal segregation by performing density profiles in accordance with Section 3268.4.I.3.c(2), "Segregation (Density Profile)."

      (2) **Severe Thermal Segregation.** Any areas that have a temperature differential greater than 50°F are deemed as having severe thermal segregation. When the Pave-IR system is not used for specification compliance, no production or placement bonus will be paid for any sublot that contains severe thermal segregation. Suspend operations and take immediate corrective action to eliminate severe thermal segregation unless otherwise directed. Resume operations when the Engineer determines that subsequent production will meet the requirements of this Section. Evaluate areas with severe thermal segregation by performing density profiles in accordance with Section 3268.4.I.3.c(2), "Segregation (Density Profile)." Remove and replace the material in any areas that have both severe thermal segregation and a failing result for Segregation (Density Profile) unless otherwise directed. The sublot in question may receive a production and placement bonus if applicable when the defective material is successfully removed and replaced.

      (3) **Use of the Pave-IR System.** In lieu of obtaining thermal profiles on each sublot using a thermal camera or an infrared thermometer, the Contractor

may use the Pave-IR system (paver mounted infrared bar) to obtain a continuous thermal profile in accordance with Tex-244-F. When electing to use the Pave-IR system, notify the Engineer prior to beginning placement operations and specify if using the Pave-IR system for specification compliance or for information only. When electing to use the Pave-IR system for information only, use a thermal camera or an infrared thermometer to obtain thermal profiles in accordance with Tex-244-F. When electing to use the Pave-IR system for information only, segregation density profiles are applicable.

When using the Pave-IR system for specification compliance, review the output results on a daily basis. Unless otherwise directed, provide the automated report described in Tex-244-F to the Engineer for review. Modify the paving process as necessary to eliminate any recurring (moderate or severe) thermal segregation identified by the Pave-IR system. The Engineer may suspend paving operations if the Contractor cannot successfully modify the paving process to eliminate recurring severe thermal segregation. Density profiles are not required and are not applicable when using the Pave-IR system for specification compliance. Upon completion of use of the Pave-IR system for specification compliance or as requested by the Engineer, provide the Engineer with electronic copies of all daily data files that can be used with the Pave-IR system software to generate temperature profile plots.

b. Windrow Operations. When hot mix is placed in windrows, operate windrow pickup equipment so that substantially all the mixture deposited on the roadbed is picked up and loaded into the paver.

c. Hauling Equipment. The Contractor may elect to use belly dumps, live bottom, or end dump trucks to haul and transfer mixture; however, with exception of paving miscellaneous areas, end dump trucks are only allowed when used in conjunction with an MTD with remixing capability or when a Pave-IR system is used for specification compliance unless otherwise allowed by the Engineer.

d. Screed Heaters. If the paver stops for more than 5 minutes, turn off screed heaters to prevent overheating of the mat. If the screed heater remains on for more than 5 minutes while the paver is stopped, the Engineer may evaluate the suspect area in accordance with Section 3268.4.I.3.c(4),"Recovered Asphalt Dynamic Shear Rheometer (DSR)."

H. Compaction. Uniformly compact the pavement to contain between 3.8% and 8.5% in-place air voids. When the in-place air voids exceed the range of 3.8% and 8.5%, take immediate corrective action to bring the operation within these tolerances. Areas defined in Section 3268.4.I.3.a(4), "Miscellaneous Areas," are not subject to in-place air void determination. In all other areas, the Engineer may obtain and test cores and may suspend operations or require removal and replacement if the in-place air voids are less than 2.7% or greater than 9.9%. The Engineer will allow paving to resume when the proposed corrective action is likely to yield between 3.8% and 8.5% in-place air voids.

Furnish the type, size, and number of rollers required for compaction as approved. Use a pneumatic-tire roller to seal the surface unless excessive pickup of fines occurs. Use additional rollers as required to remove any roller marks. Use only water or an approved release agent on rollers, tamps, and other compaction equipment unless otherwise directed.

On the first day of production, use the control strip method given in Tex-207-F, Part IV, to establish the rolling pattern that will produce the desired in-place air voids unless otherwise directed.

Use tamps to thoroughly compact the edges of the pavement along curbs, headers, and similar structures and in locations that will not allow thorough compaction with rollers. The Engineer may require rolling with a trench roller on widened areas, in trenches, and in other limited areas.

Complete all compaction operations before the pavement temperature drops below 160°F unless otherwise allowed. The Engineer may allow compaction with a light finish roller operated in static mode for pavement temperatures below 160°F.

Allow the compacted pavement to cool to 160°F or lower before opening to traffic unless otherwise directed. When directed, sprinkle the finished mat with water or limewater to expedite opening the roadway to traffic.

I. Acceptance Plan. Pay adjustments for the material will be in accordance with Article 3268.6, "Payment."

Sample and test the hot mix on a lot and sublot basis. If the production pay factor given in Section 3268.6.A, "Production Pay Adjustment Factors," for two consecutive lots or the placement pay factor given in Section 3268.6.B, "Placement Pay Adjustment Factors," for two consecutive lots is below 1.000, suspend production until test results or other information indicates to the satisfaction of the Engineer that the next material produced or placed will result in pay factors of at least 1.000.

1. **Referee Testing.** The Construction Division is the referee laboratory. The Contractor may request referee testing if a "remove and replace" condition is determined based on the Engineer's test results, or if the differences between Contractor and Engineer test results exceed the maximum allowable difference shown in Table 11 and the differences cannot be resolved. The Contractor may also request referee testing if the Engineer's test results require suspension of production and the Contractor's test results are within specification limits. Make the request within 5 working days after receiving test results and cores from the Engineer. Referee tests will be performed only on the sublot in question and only for the particular tests in question. Allow 10 working days from the time the samples are received at the referee laboratory for test results to be reported. The Department may require the Contractor to reimburse the Department for referee tests if more than three referee tests per project are required and the Engineer's test results are closer than the Contractor's test results to the referee test results.

   The Construction Division will determine the laboratory-molded density based on the molded specific gravity and the maximum theoretical specific gravity of the

referee sample. The in-place air voids will be determined based on the bulk specific gravity of the cores, as determined by the referee laboratory and the Engineer's average maximum theoretical specific gravity for the lot. With the exception of "remove and replace" conditions, referee test results are final and will establish pay adjustment factors for the sublot in question. The Contractor may decline referee testing and accept the Engineer's test results when the placement pay adjustment factor for any sublot results in a "remove and replace" condition. Placement sublots subject to be removed and replaced will be further evaluated in accordance with Section 3268.6.B.2, "Placement Sublots Subject to Removal and Replacement."

2. Production Acceptance.

a. Production Lot. A production lot consists of four equal sublots. The default quantity for Lot 1 is 1,000 tons; however, when requested by the Contractor, the Engineer may increase the quantity for Lot 1 to no more than 4,000 tons. The Engineer will select subsequent lot sizes based on the anticipated daily production such that approximately three to four sublots are produced each day. The lot size will be between 1,000 tons and 4,000 tons. The Engineer may change the lot size before the Contractor begins any lot.

If the optimum asphalt content for JMF2 is more than 0.5% lower than the optimum asphalt content for JMF1, the Engineer may perform or require the Contractor to perform Tex-226-F on Lot 1 to confirm the indirect tensile strength does not exceed 200 psi. If the indirect tensile strength exceeds 200 psi, take corrective action to bring the mixture within specification compliance unless otherwise directed.

(1) Incomplete Production Lots. If a lot is begun but cannot be completed, such as on the last day of production or in other circumstances deemed appropriate, the Engineer may close the lot. Adjust the payment for the incomplete lot in accordance with Section 3268.6.A, "Production Pay Adjustment Factors." Close all lots within 5 working days unless otherwise allowed by the Engineer.

b. Production Sampling.

(1) Mixture Sampling. Obtain hot mix samples from trucks at the plant in accordance with Tex-222-F. The sampler will split each sample into three equal portions in accordance with Tex-200-F and label these portions as "Contractor," "Engineer," and "Referee." The Engineer will perform or witness the sample splitting and take immediate possession of the samples labeled "Engineer" and "Referee." The Engineer will maintain the custody of the samples labeled "Engineer" and "Referee" until the Department's testing is completed.

(a) Random Sample. At the beginning of the project, the Engineer will select random numbers for all production sublots. Determine sample locations in accordance with Tex-225-F. For each sublot, take one

sample at the location randomly selected. The Engineer will perform or witness the sampling of production sublots.

(b) Blind Sample. For one sublot per lot, the Engineer will obtain and test a "blind" sample in lieu of the random sample collected by the Contractor. The Contractor may test either the "blind" or the random sample; however, referee testing (if applicable) will be based on a comparison of results from the "blind" sample. The location of the Engineer's "blind" sample will not be disclosed to the Contractor. The Engineer's "blind" sample may be randomly selected in accordance with Tex-225-F for any sublot or selected at the discretion of the Engineer. The Engineer will use the Contractor's split sample for sublots not sampled by the Engineer.

(2) Informational Cantabro and Overlay Testing. During the first week of production, randomly select one sublot from Lot 2 or higher for Cantabro and Overlay testing. Obtain and provide the Engineer with approximately 150 lb. (70 kg) of mixture in sealed containers, boxes, or bags labeled with CSJ, mixture type, lot, and sublot number. The Engineer will ship the mixture to the Construction Division for Cantabro and Overlay testing. Results from these tests will not be used for specification compliance.

(3) Asphalt Binder Sampling. Obtain a 1 qt. sample of the asphalt binder for each lot of mixture produced. Obtain the sample at approximately the same time the mixture random sample is obtained. Sample from a port located immediately upstream from the mixing drum or pug mill in accordance with Tex-500-C, Part II. Label the can with the corresponding lot and sublot numbers and deliver the sample to the Engineer. The Engineer may also obtain independent samples. If obtaining an independent asphalt binder sample, the Engineer will split a sample of the asphalt binder with the Contractor. The Engineer will test at least one asphalt binder sample per project to verify compliance with Item 300, "Asphalts, Oils, and Emulsions."

c. Production Testing. The Contractor and Engineer must perform production tests in accordance with Table 14. The Contractor has the option to verify the Engineer's test results on split samples provided by the Engineer. Determine compliance with operational tolerances listed in Table 11 for all sublots.

If the Engineer's laboratory-molded density on any sublot is less than 95.0% or greater than 98.0%, take immediate corrective action to bring the mixture within these tolerances. The Engineer may suspend operations if the Contractor's corrective actions do not produce acceptable results. The Engineer will allow production to resume when the proposed corrective action is likely to yield acceptable results.

If the aggregate mineralogy is such that Tex-236-F does not yield reliable results, the Engineer may allow alternate methods for determining the asphalt content and aggregate gradation. Provide evidence that results from Tex-236-F

are not reliable before requesting permission to use an alternate method unless otherwise directed. If an alternate test method is allowed, use the applicable test procedure as directed.

Table 14
Production and Placement Testing Frequency

Description	Test Method	Minimum Contractor Testing Frequency	Minimum Engineer Testing Frequency[1]
Individual % retained for #8 sieve and larger	Tex-200-F or Tex-236-F	1 per sublot	1 per 12 sublots
Individual % retained for sieves smaller than #8 and larger than #200			
% passing the #200 sieve			
Laboratory-molded density	Tex-207-F	N/A	1 per sublot
Laboratory-molded bulk specific gravity			
In-place air voids			
VMA	Tex-204-F		
Segregation (density profile)[5]	Tex-207-F, Part V	1 per sublot	1 per project
Longitudinal joint density	Tex-207-F, Part VII		
Moisture content	Tex-212-F, Part II	When directed	
Theoretical maximum specific (Rice) gravity	Tex-227-F	N/A	1 per sublot
Asphalt content	Tex-236-F	1 per sublot	1 per lot
Hamburg Wheel test	Tex-242-F	N/A	1 per project
Recycled Asphalt Shingles (RAS)[2]	Tex-217-F, Part III	N/A	
Thermal profile[5]	Tex-244-F	1 per sublot	
Asphalt binder sampling and testing	Tex-500-C	1 per lot (sample only)	
Tack coat sampling and testing	Tex-500-C, Part III	N/A	
Boil test[3]	Tex-530-C	1 per lot	
Cantabro loss[4]	Tex-245-F	1 per project (sample only)	
Overlay test[4]	Tex-248-F		

1. For production defined in Section 3268.I.4, "Exempt Production," the Engineer will test at the frequency listed in the Department's *Guide Schedule of Sampling and Testing* and this specification.
2. Testing performed by the Construction Division or designated laboratory.
3. The Engineer may reduce or waive the sampling and testing requirements based on a satisfactory test history.
4. Testing performed by the Construction Division and for informational purposes only.
5. Not required when the Pave-IR system is used for specification compliance.

d. Operational Tolerances. Control the production process within the operational tolerances listed in Table 11. When production is suspended, the Engineer will allow production to resume when test results or other information indicates that the next mixture produced will be within the operational tolerances.

(1) Gradation. Suspend operation and take corrective action if any aggregate is retained on the maximum sieve size shown in Table 8. A sublot is defined as out of tolerance if either the Engineer's or the Contractor's test results are out of operational tolerance. Unless otherwise directed, suspend production when test results for gradation exceed the operational tolerances for three consecutive sublots on the same sieve or four consecutive sublots on any sieve. The consecutive sublots may be from more than one lot.

(2) Asphalt Content. A sublot is defined as out of operational tolerance if either the Engineer's or the Contractor's test results exceed the values listed in Table 11. No production or placement bonus will be paid for any sublot that is out of operational tolerance for asphalt content. Suspend production and shipment of the mixture if the Engineer's or the Contractor's asphalt content deviates from the current JMF by more than 0.5% for any sublot.

(3) Voids in Mineral Aggregates (VMA). The Engineer will determine the VMA for every sublot. For sublots when the Engineer does not determine asphalt content, the Engineer will use the asphalt content results from quality control testing performed by the Contractor to determine VMA.

Take immediate corrective action if the VMA value for any sublot is less than the minimum VMA requirement for production listed in Table 8. Suspend production and shipment of the mixture if the Engineer's VMA results on two consecutive sublots are below the minimum VMA requirement for production listed in Table 8. No production or placement bonus will be paid for any sublot that does not meet the minimum VMA requirement for production listed in Table 8 based on the Engineer's VMA determination.

Suspend production and shipment of the mixture if the Engineer's VMA result is more than 0.5% below the minimum VMA requirement for production listed in Table 8. In addition to suspending production, the Engineer may require removal and replacement or may allow the sublot to be left in place without payment.

(4) Hamburg Wheel Test. The Engineer may perform a Hamburg Wheel test at any time during production, including when the boil test indicates a change in quality from the materials submitted for JMF1. In addition to testing production samples, the Engineer may obtain cores and perform Hamburg Wheel tests on any areas of the roadway where rutting is observed. When the production or core samples fail the Hamburg Wheel test criteria in Table 10, suspend production until further Hamburg Wheel tests meet the specified values. Core samples, if taken, will be obtained from the center of the finished mat or other areas excluding the vehicle wheel paths. The Engineer may require up to the entire sublot of any mixture failing the Hamburg Wheel test to be removed and replaced at the Contractor's expense.

If the Department's or approved laboratory's Hamburg Wheel test results in a "remove and replace" condition, the Contractor may request that the Department confirm the results by retesting the failing material. The Construction Division will perform the Hamburg Wheel tests and determine the final disposition of the material in question based on the Department's test results.

e. **Individual Loads of Hot Mix.** The Engineer can reject individual truckloads of hot mix. When a load of hot mix is rejected for reasons other than temperature, contamination, or excessive uncoated particles, the Contractor may request that the rejected load be tested. Make this request within 4 hr. of rejection. The Engineer will sample and test the mixture. If test results are within the operational tolerances shown in Table 11, payment will be made for the load. If test results are not within operational tolerances, no payment will be made for the load and the Engineer may require removal.

3. **Placement Acceptance.**

a. **Placement Lot.** A placement lot consists of four placement sublots. A placement sublot consists of the area placed during a production sublot.

(1) **Lot 1 Placement.** Placement bonuses for Lot 1 will be in accordance with Section 3268.6.B, "Placement Pay Adjustment Factors;" however, no placement penalty will be assessed for any sublot placed in Lot 1 when the in-place air voids are greater than or equal to 2.7% and less than or equal to 9.9%. Remove and replace any sublot with in-place air voids less than 2.7% or greater than 9.9%.

(2) **Incomplete Placement Lots.** An incomplete placement lot consists of the area placed as described in Section 3268.4.I.2.a(1), "Incomplete Production Lots," excluding areas defined in Section 3268.4.I.3.a(4), "Miscellaneous Areas." Placement sampling is required if the random sample plan for production resulted in a sample being obtained from an incomplete production sublot.

(3) **Shoulders, Ramps, Etc.** Shoulders, ramps, intersections, acceleration lanes, deceleration lanes, and turn lanes are subject to in-place air void determination unless designated on the plans as not eligible for in-place air void determination. Intersections may be considered miscellaneous areas when determined by the Engineer.

(4) **Miscellaneous Areas.** Miscellaneous areas include areas that typically involve significant handwork or discontinuous paving operations, such as temporary detours, driveways, mailbox turnouts, crossovers, gores, spot level-up areas, and other similar areas. Temporary detours are subject to in-place air void determination when shown on the plans. Miscellaneous areas also include level-ups and thin overlays when the layer thickness specified on the plans is less than the minimum untrimmed core height eligible for testing shown in Table 12. The specified layer thickness is based on the rate of 110 lb./sq. yd. for each inch of pavement unless another rate is shown on the plans. Miscellaneous areas are not eligible for random placement sampling locations. Compact miscellaneous areas in accordance with Section 3268.4.H, "Compaction." Miscellaneous areas are not subject to in-place air void determination, thermal profiles testing, segregation (density profiles), or longitudinal joint density evaluations.

b. Placement Sampling. At the beginning of the project, the Engineer will select random numbers for all placement sublots. The Engineer will provide the Contractor with the placement random numbers immediately after the sublot is completed. Mark the roadway location at the completion of each sublot and record the station number. Determine one random sample location for each placement sublot in accordance with Tex-225-F. If the randomly generated sample location is within 2 ft. of a joint or pavement edge, adjust the location by no more than necessary to achieve a 2-ft. clearance.

Shoulders, ramps, intersections, acceleration lanes, deceleration lanes, and turn lanes are always eligible for selection as a random sample location; however, if a random sample location falls on one of these areas and the area is designated on the plans as not subject to in-place air void determination, cores will not be taken for the sublot and a 1.000 pay factor will be assigned to that sublot.

Provide the equipment and means to obtain and trim roadway cores on site. On site is defined as in close proximity to where the cores are taken. Obtain the cores within 1 working day of the time the placement sublot is completed unless otherwise approved. Obtain two 6-in. diameter cores side-by-side from within 1 ft. of the random location provided for the placement sublot. For Type D and Type F mixtures, 4-in. diameter cores are allowed. Mark the cores for identification, measure and record the untrimmed core height, and provide the information to the Engineer. The Engineer will witness the coring operation and measurement of the core thickness. Visually inspect each core and verify that the current paving layer is bonded to the underlying layer. If an adequate bond does not exist between the current and underlying layer, take corrective action to ensure that an adequate bond will be achieved during subsequent placement operations.

Immediately after obtaining the cores from the roadway, trim the cores in accordance with Tex-207-F if the core heights meet the minimum untrimmed values listed in Table 12. Trim the cores on site in the presence of the Engineer. Use a permanent marker or paint pen to record the lot and sublot numbers on each core as well as the designation as Core A or B. The Engineer may require additional information to be marked on the core and may choose to sign or initial the core. The Engineer will take custody of the cores immediately after they are trimmed and will retain custody of the cores until the Department's testing is completed. Prior to turning the trimmed cores over to the Engineer, the Contractor may elect to wrap the trimmed cores or secure them in a manner that will reduce the risk of possible damage occurring during transport by the Engineer. After testing, the Engineer will return the cores to the Contractor.

The Engineer may elect to have the cores transported back to the Department's laboratory at the HMA plant via the Contractor's haul truck or other designated vehicle. In such cases where the cores will be out of the Engineer's possession during transport, the Engineer will use the Construction Division's protocol to provide a secure means and process that protects the integrity of the cores during transport.

If the core height before trimming is less than the minimum untrimmed value shown in Table 12, decide whether to include the pair of cores in the air void determination for that sublot. If electing to have the cores included in air void determination, trim the cores as described above before delivering to the Engineer. If electing to not have the cores included in air void determination, deliver untrimmed cores to the Engineer and inform the Engineer of the decision to not have the cores included in air void determination. The placement pay factor for the sublot will be 1.000 if cores will not be included in air void determination.

In lieu of the Contractor trimming the cores on site immediately after coring, the Engineer and the Contractor may mutually agree to have the trimming operations performed at an alternate location such as a field laboratory or other similar location. In such cases, the Engineer will take possession of the cores immediately after they are obtained from the roadway and will retain custody of the cores until testing is completed. Either the Department or Contractor representative may perform trimming of the cores. The Engineer will witness all trimming operations in cases where the Contractor representative performs the trimming operation.

Immediately after obtaining the cores, dry the core holes and tack the sides and bottom. Fill the hole with the same type of mixture and properly compact the mixture. Repair core holes with other methods when approved.

c. Placement Testing. Perform placement tests in accordance with Table 14. After the Engineer returns the cores, the Contractor has the option to test the cores to verify the Engineer's test results for in-place air voids. The allowable differences between the Contractor's and Engineer's test results are listed in Table 11.

(1) In-Place Air Voids. The Engineer will measure in-place air voids in accordance with Tex-207-F and Tex-227-F. Before drying to a constant weight, cores may be pre-dried using a Corelok or similar vacuum device to remove excess moisture. The Engineer will average the values obtained for all sublots in the production lot to determine the theoretical maximum specific gravity. The Engineer will use the average air void content for in-place air voids.

The Engineer will use the vacuum method to seal the core if required by Tex-207-F. The Engineer will use the test results from the unsealed core to determine the placement pay adjustment factor if the sealed core yields a higher specific gravity than the unsealed core. After determining the in-place air void content, the Engineer will return the cores and provide test results to the Contractor.

(2) Segregation (Density Profile). Test for segregation using density profiles in accordance with Tex-207-F, Part V. Density profiles are not required and are not applicable when using the Pave-IR system for specification

compliance. Density profiles are not applicable in areas described in Section 3268.4.I.3.a(4), "Miscellaneous Areas."

Unless otherwise approved, perform a density profile every time the paver stops for more than 60 seconds, on areas that are identified by either the Contractor or the Engineer as having thermal segregation, and on any visibly segregated areas. If the paver does not stop for more than 60 seconds, and there are no visibly segregated areas or areas that are identified as having thermal segregation, perform a minimum of one profile per sublot.

Within 1 working day of the completion of each lot, provide the Engineer with the density profile of every sublot within the lot. Report the results of each density profile in accordance with Section 3268.4.B, "Reporting and Responsibilities."

The density profile is considered failing if it exceeds the tolerances in Table 15. No production or placement bonus will be paid for any sublot that contains a failing density profile. When the Pave-IR system is not used for specification compliance, the Engineer will measure the density profile at least once per project. The Engineer's density profile results will be used when available. The Engineer may require the Contractor to remove and replace the area in question if the area fails the density profile and has surface irregularities as defined in Section 3268.4.I.3.c(5), "Irregularities." The sublot in question may receive a production and placement bonus if applicable when the defective material is successfully removed and replaced.

Investigate density profile failures and take corrective actions during production and placement to eliminate the segregation. Suspend production if two consecutive density profiles fail unless otherwise approved. Resume production after the Engineer approves changes to production or placement methods.

Table 15
Segregation (Density Profile) Acceptance Criteria

Mixture Type	Maximum Allowable Density Range (Highest to Lowest)	Maximum Allowable Density Range (Average to Lowest)
Type A & Type B	8.0 pcf	5.0 pcf
Type C, Type D & Type F	6.0 pcf	3.0 pcf

(3) Longitudinal Joint Density.

(a) Informational Tests. While establishing the rolling pattern, perform joint density evaluations, and verify that the joint density is no more than 3.0 pcf below the density taken at or near the center of the mat. Adjust the rolling pattern, if needed, to achieve the desired joint density. Perform additional joint density evaluations at least once per sublot unless otherwise directed.

(b) Record Tests. For each sublot, perform a joint density evaluation at each pavement edge that is or will become a longitudinal joint. Joint density evaluations are not applicable in areas described in Section 3268.4.I.3.a(4), "Miscellaneous Areas." Determine the joint density in accordance with Tex-207-F, Part VII. Record the joint density information and submit results on Department forms to the Engineer. The evaluation is considered failing if the joint density is more than 3.0 pcf below the density taken at the core random sample location and the correlated joint density is less than 90.0%. The Engineer will make an independent joint density verification at least once per project and may make independent joint density verifications at the random sample locations. The Engineer's joint density test results will be used when available.

Within 1 working day of the completion of each lot, provide the Engineer with the joint density of every sublot within the lot. Report the results of each joint density in accordance with Section 3268.4.B, "Reporting and Responsibilities."

Investigate joint density failures and take corrective actions during production and placement to improve the joint density. Suspend production if the evaluations on two consecutive sublots fail unless otherwise approved. Resume production after the Engineer approves changes to production or placement methods.

(4) Recovered Asphalt Dynamic Shear Rheometer (DSR). When the Pave-IR system is not used for specification compliance, the Engineer may take production samples or cores from suspect areas of the project to determine recovered asphalt properties. Asphalt binders with an aging ratio greater than 3.5 do not meet the requirements for recovered asphalt properties and may be deemed defective when tested and evaluated by the Construction Division. The aging ratio is the DSR value of the extracted binder divided by the DSR value of the original unaged binder. Obtain DSR values in accordance with AASHTO T 315 at the specified high temperature performance grade of the asphalt. The Engineer may require removal and replacement of the defective material at the Contractor's expense. The asphalt binder will be recovered for testing from production samples or cores in accordance with Tex-211-F.

(5) Irregularities. Identify and correct irregularities including but not limited to segregation, rutting, raveling, flushing, fat spots, mat slippage, irregular color, irregular texture, roller marks, tears, gouges, streaks, uncoated aggregate particles, or broken aggregate particles. The Engineer may also identify irregularities, and in such cases, the Engineer will promptly notify the Contractor. If the Engineer determines that the irregularity will adversely affect pavement performance, the Engineer may require the Contractor to remove and replace (at the Contractor's expense) areas of the pavement that contain irregularities and areas where the mixture does not bond to the existing pavement.

If irregularities are detected, the Engineer may require the Contractor to immediately suspend operations or may allow the Contractor to continue operations for no more than 1 day while the Contractor is taking appropriate corrective action.

4. **Exempt Production.** When the anticipated daily production is less than 1,000 tons, the total production for the project is less than 5,000 tons, or when mutually agreed between the Engineer and the Contractor, the Engineer may deem the mixture as exempt production. Production may also be exempt when shown on the plans.

   For exempt production, the Contractor is relieved of all production and placement sampling and testing requirements, and the production and placement pay factors are 1.000. All other specification requirements apply, and the Engineer will perform acceptance tests for production and placement listed in Table 14 at the frequency listed in the Department's *Guide Schedule of Sampling and Testing*.

   For exempt production:

   - produce, haul, place, and compact the mixture in compliance with the specification and as directed by the Engineer;
   - control mixture production to yield a laboratory-molded density that is within ± 1.0% of the target laboratory-molded density as tested by the Engineer;
   - compact the mixture in accordance with Section 3268.4.H, "Compaction"; and
   - when the Contractor elects not to use the Pave-IR system for specification compliance, the Engineer may perform segregation (density profiles) and thermal profiles in accordance with the specification.

5. **Ride Quality.** Measure ride quality in accordance with Item 585, "Ride Quality for Pavement Surfaces," unless otherwise shown on the plans.

5. Measurement. Hot mix will be measured by the ton of composite hot mix, which includes asphalt, aggregate, and additives. Measure the weight on scales in accordance with Item 520, "Weighing and Measuring Equipment."

6. Payment. The work performed and materials furnished in accordance with this Item and measured as provided under Article 3268.5, "Measurement," will be paid for at the unit price bid for "Dense Graded Hot-Mix Asphalt" of the type, surface aggregate classification, and binder specified. These prices are full compensation for surface preparation; materials including tack coat; placement; equipment; labor; tools; and incidentals.

Pay adjustments for bonuses and penalties will be applied as determined in this Item; however, a pay adjustment factor of 1.000 will be assigned for all placement sublots for "level ups" only when "level up" is listed as part of the item bid description code. A pay adjustment factor of 1.000 will be assigned to all production and placement sublots when "exempt" is listed as part of the item bid description code.

Applicable pay adjustment bonuses will only be paid for sublots when the Contractor supplies the Engineer with the required documentation for production and placement QC/QA, thermal profiles, segregation density profiles, and longitudinal joint density in accordance with Section 3268.4.B, "Reporting and Responsibilities." If the Contractor uses the Pave-IR system for specification compliance, documentation is not required for thermal profiles or segregation density profiles on individual sublots; however, the Pave-IR system automated reports described in Tex-244-F are required.

Trial batches will not be paid for unless they are included in pavement work approved by the Department.

Pay adjustment for ride quality will be determined in accordance with Item 585, "Ride Quality for Pavement Surfaces."

A. Production Pay Adjustment Factors. The production pay adjustment factor is based on the laboratory-molded density using the Engineer's test results. A pay adjustment factor will be determined from Table 16 for each sublot using the deviation from the target laboratory-molded density defined in Table 9. The production pay adjustment factor for completed lots will be the average of the pay adjustment factors for the four sublots sampled within that lot.

Table 16
Production Pay Adjustment Factors for Laboratory-Molded Density[1]

Absolute Deviation from Target Laboratory-Molded Density	Production Pay Adjustment Factor (Target Laboratory-Molded Density)
0.0	1.050
0.1	1.050
0.2	1.050
0.3	1.044
0.4	1.038
0.5	1.031
0.6	1.025
0.7	1.019
0.8	1.013
0.9	1.006
1.0	1.000
1.1	0.965
1.2	0.930
1.3	0.895
1.4	0.860
1.5	0.825
1.6	0.790
1.7	0.755
1.8	0.720
> 1.8	Remove and replace

1. If the Engineer's laboratory-molded density on any sublot is less than 95.0% or greater than 98.0%, take immediate corrective action to bring the mixture within these tolerances. The Engineer may suspend operations if the Contractor's corrective actions do not produce acceptable results. The Engineer will allow production to resume when the proposed corrective action is likely to yield acceptable results.

1. Payment for Incomplete Production Lots. Production pay adjustments for incomplete lots, described under Section 3268.4.I.2.a(1), "Incomplete Production Lots," will be calculated using the average production pay factors from all sublots

sampled. A production pay factor of 1.000 will be assigned to any lot when the random sampling plan did not result in collection of any samples.

2. **Production Sublots Subject to Removal and Replacement.** If after referee testing, the laboratory-molded density for any sublot results in a "remove and replace" condition as listed in Table 16, the Engineer may require removal and replacement, or may allow the sublot to be left in place without payment. The Engineer may also elect to accept the sublot in accordance with Item 5, "Control of the Work," Section 5.3.A, "Acceptance of Defective or Unauthorized Work." Replacement material meeting the requirements of this Item will be paid for in accordance with this Section.

B. Placement Pay Adjustment Factors. The placement pay adjustment factor is based on in-place air voids using the Engineer's test results. A pay adjustment factor will be determined from Table 17 for each sublot that requires in-place air void measurement. A placement pay adjustment factor of 1.000 will be assigned to the entire sublot when the random sample location falls in an area designated on the plans as not subject to in-place air void determination. A placement pay adjustment factor of 1.000 will be assigned to quantities placed in areas described in Section 3268.4.I.3.a(4), "Miscellaneous Areas." The placement pay adjustment factor for completed lots will be the average of the placement pay adjustment factors for up to four sublots within that lot.

Table 17
Placement Pay Adjustment Factors for In-place Air Voids

In-place Air Voids	Placement Pay Adjustment Factor	In-place Air Voids	Placement Pay Adjustment Factor
< 2.7	Remove and Replace	6.4	1.042
2.7	0.710	6.5	1.040
2.8	0.740	6.6	1.038
2.9	0.770	6.7	1.036
3.0	0.800	6.8	1.034
3.1	0.830	6.9	1.032
3.2	0.860	7.0	1.030
3.3	0.890	7.1	1.028
3.4	0.920	7.2	1.026
3.5	0.950	7.3	1.024
3.6	0.980	7.4	1.022
3.7	0.998	7.5	1.020
3.8	1.002	7.6	1.018
3.9	1.006	7.7	1.016
4.0	1.010	7.8	1.014
4.1	1.014	7.9	1.012
4.2	1.018	8.0	1.010
4.3	1.022	8.1	1.008
4.4	1.026	8.2	1.006
4.5	1.030	8.3	1.004
4.6	1.034	8.4	1.002
4.7	1.038	8.5	1.000
4.8	1.042	8.6	0.998
4.9	1.046	8.7	0.996
5.0	1.050	8.8	0.994
5.1	1.050	8.9	0.992
5.2	1.050	9.0	0.990
5.3	1.050	9.1	0.960
5.4	1.050	9.2	0.930
5.5	1.050	9.3	0.900
5.6	1.050	9.4	0.870
5.7	1.050	9.5	0.840
5.8	1.050	9.6	0.810
5.9	1.050	9.7	0.780
6.0	1.050	9.8	0.750
6.1	1.048	9.9	0.720
6.2	1.046	> 9.9	Remove and Replace
6.3	1.044		

1. **Payment for Incomplete Placement Lots.** Pay adjustments for incomplete placement lots described under Section 3268.4.I.3.a(2), "Incomplete Placement Lots," will be calculated using the average of the placement pay factors from all sublots sampled and sublots where the random location falls in an area designated on the plans as not eligible for in-place air void determination. A placement pay adjustment factor of 1.000 will be assigned to any lot when the random sampling plan did not result in collection of any samples.

2. **Placement Sublots Subject to Removal and Replacement.** If after referee testing, the placement pay adjustment factor for any sublot results in a "remove and replace" condition as listed in Table 17, the Engineer will choose the location of

two cores to be taken within 3 ft. of the original failing core location. The Contractor will obtain the cores in the presence of the Engineer. The Engineer will take immediate possession of the untrimmed cores and submit the untrimmed cores to the Construction Division, where they will be trimmed if necessary and tested for bulk specific gravity within 10 working days of receipt. The average bulk specific gravity of the cores will be divided by the Engineer's average maximum theoretical specific gravity for that lot to determine the new pay adjustment factor of the sublot in question. If the new pay adjustment factor is 0.700 or greater, the new pay adjustment factor will apply to that sublot. If the new pay adjustment factor is less than 0.700, no payment will be made for the sublot. Remove and replace the failing sublot, or the Engineer may allow the sublot to be left in place without payment. The Engineer may also elect to accept the sublot in accordance with Item 5, "Control of the Work," Section 5.3.A "Acceptance of Defective or Unauthorized Work." Replacement material meeting the requirements of this Item will be paid for in accordance with this Section.

C. Total Adjusted Pay Calculation. Total adjusted pay (TAP) will be based on the applicable pay adjustment factors for production and placement for each lot.

$TAP = (A+B)/2$

where:

A = Bid price × production lot quantity × average pay adjustment factor for the production lot

B = Bid price × placement lot quantity × average pay adjustment factor for the placement lot + (bid price × quantity placed in miscellaneous areas × 1.000)

Production lot quantity = Quantity actually placed - quantity left in place without payment

Placement lot quantity = Quantity actually placed - quantity left in place without payment - quantity placed in miscellaneous areas

GOVERNING SPECIFICATIONS AND SPECIAL PROVISIONS

STANDARD SPECIFICATIONS: Adopted by the Texas Department of Transportation, June 1, 2004. Standard Specifications are incorporated into the contract by reference.

SPECIAL PROVISIONS: Special Provisions will govern and take precedence over the Specifications enumerated hereon wherever in conflict therewith. (Enclosed herewith)

CITY OF WESLACO
PURCHASING DEPARTMENT
VENDOR APPLICATION

Company Name: **Telephone No. ( )**

dba Name:

Legal Name:

Mailing Address : **Fax No. ( )**

Physical Address:

City, State, Zip **Tax I.D. No.**

Remit to Address : **City, State, Zip**

E-Mail Address:

Representative(s) Name(s) & Title(s)

Type of Organization (check one): _____ **Individual** _____ **Partnership** _____ **Corporation** _____**Non-Profit**
_____ **LLC** _____ **Sole Proprietor** _____ **Other, Specify**
State Identification No._____ **(Please attached completed W-9 form with this application)**
Federal Identification No. or (if individual) SS No.

State of Incorporation: _____ **Date:**_____ **Other**:

Type of Business (check one): _____ **Manufacturer** _____ **Wholesaler** _____ **Retailer** _____ **Broker**
_____ **Distributor** _____ **Service Organization** _____ **Other, Specify**

Name & Title of Person(s) Authorized to Sign Bids, Proposals, and/or Contracts:

Small and/or Disadvantaged Business Information (check application criteria)

Small Business:	**Disadvantaged Business (At Least 51% Ownership)**	
☐ Less than 125,000 annual gross receipt	☐ Black American	☐ Native American
☐ Less than 250,000 annual gross receipt	☐ Hispanic American	☐ Women
☐ Less than 499,000 annual gross receipt	☐ Asian Pacific American	☐ Other
☐ More than 500,000 annual gross receipt		

Have you been certified as a HUB or an MBE/WBE source?: ☐ Yes ☐ No

Indicate Certification No.(s):_____ **or are Certificate(s) attached?:** ☐ Yes ☐ No

What type of product(s) is/are solicited by your company?:

Would you like to be provided with specifications for procurements of such products?: ☐ Yes ☐ No

To Be Completed by the City of Weslaco: Rec'd by (Purchasing):_____ **Date Rec'd by (Purchasing):**

The City requires that you furnish a certificate of insurance as required by Texas Labor Code 406.096, Prior to commencement of any work/service. Coverage must be as follows (Minimum amounts):

Worker's Compensation	Statutory
Comprehensive General Liability	$1,000,000
Bodily Injury Property Damage (Per Occurrence)	$1,000,000

Please Return this form by fax or mail to:

City of Weslaco
Purchasing Department
255 S Kansas
Weslaco, Texas 78596
Fax: (956) 969-8452
Phone: (956) 447-2240

DISCLOSURE OF CONFLICT OF INTEREST

Effective January 1, 2006, Chapter 176 of the Texas Local Government Code requires that any vendor, person, consultant or contractor considering doing business with City of Weslaco ("the City") to disclose in the Conflict of Interest Questionnaire (the "CIQ") attached as Exhibit D, the vendor, person, consultant or contractor's affiliation or business relationship that might cause a conflict of interest with the County. By law, the CIQ must be filed with the City's Office no later than the seventh business day after the date the person becomes aware of facts that require that statement to be filed. The disclosure requirement applies to a person or business who contracts or seeks to contract with City of Weslaco for the sale or purchase of property, goods or service. Any purchase order or contract resulting from this process shall be considered null and void if the successful bidder fails to comply with Texas Local Government Code Chapter 176. Vendors, consultants, contractors and others who desire to conduct business with The City of Weslaco are encouraged to refer to Texas Local Government Code Chapter 176 for the details of this law. An offense under Texas Local Government Code Chapter 176 is a Class C Misdemeanor.

Please Submit completed forms to the City's Purchasing Department

COMPLETION AND SUBMISSION OF FORM CIQ IS THE SOLE RESPONSIBILITY OF THE PROSPECTIVE BIDDER.

SALES TAX AND LOCAL SALES TAX
EXEMPTION CERTIFICATE FOR CONTRACTORS

This Contract is to be performed for an exempt organization as defined by Article 20.04 (H) (4) of the Texas Limited Sales, Excise, and Use Tax Act and the undersigned hereby claims an exemption from payment of taxes under Chapter 20, title 122A, revised hereby claims an exemption from payment of taxes under Chapter 20, title 122A, revised civil statues of Texas, and Article 1066 ©, entitle Local Sales and Use Tax, revised civil statues of Texas.

The Contractor performing this Contract may purchase, rent, or lease all materials, supplies, equipment used for consumed in the performance of this Contract by issuing to his retailer an exemption certificate in lieu of the tax, said exemption certificate complying with State Comptroller's Ruling No 95-9.07. Any such exemption certificate issue by the Contractor in lieu of the tax shall be subject to the provisions of the State Comptroller's Ruling No. 95.0.09 as amended to be effective October 2, 1968.

EXECUTED this the _____ day of _____, 20_____.

_____

Contractor

GOVERNMENT CODE

CHAPTER 2258. PREVAILING WAGE RATES

SUBCHAPTER A. GENERAL PROVISIONS

§Sec. 2258.001. DEFINITIONS. In this chapter:

(1) "Locality in which the work is performed" means:

(A) for a contract for a public work awarded by the state, the political subdivision of the state in which the public work is located:

(i) which may include a county, municipality, county and municipality, or district, except as provided by Subparagraph (ii); and

(ii) which, in a municipality with a population of 500,000 or more, may only include the geographic limits of the municipality; or

(B) for a contract for a public work awarded by a political subdivision of the state, the geographical limits of the political subdivision.

(2) "Public body" means a public body awarding a contract for a public work on behalf of the state or a political subdivision of the state.

(3) "Worker" includes a laborer or mechanic.

Added by Acts 1995, 74th Leg., ch. 76, Sec. 5.49(a), eff. Sept. 1, 1995. Amended by Acts 2001, 77th Leg., ch. 1422, Sec. 14.04, eff. Sept. 1, 2001.

§Sec. 2258.002. APPLICABILITY OF CHAPTER TO PUBLIC WORKS. (a) This chapter applies only to the construction of a public work, including a building, highway, road, excavation, and repair work or other project development or improvement, paid for in whole or in part from public funds, without regard to whether the work is done under public supervision or direction.

(b) This chapter does not apply to work done directly by a public utility company under an order of a public authority.

Added by Acts 1995, 74th Leg., ch. 76, Sec. 5.49(a), eff. Sept. 1, 1995.

§Sec. 2258.003. LIABILITY. An officer, agent, or employee of a public body is not liable in a civil action for any act or omission implementing or enforcing this chapter unless the action was made in bad faith.

Added by Acts 1995, 74th Leg., ch. 76, Sec. 5.49(a), eff. Sept. 1, 1995.

SUBCHAPTER B. PAYMENT OF PREVAILING WAGE RATES

§Sec. 2258.021. RIGHT TO BE PAID PREVAILING WAGE RATES. (a) A worker employed on a public work by or on behalf of the state or a political subdivision of the state shall be paid:

(1) not less than the general prevailing rate of per diem wages for work of a similar

character in the locality in which the work is performed; and

(2) not less than the general prevailing rate of per diem wages for legal holiday and overtime work.

(b) Subsection (a) does not apply to maintenance work.

(c) A worker is employed on a public work for the purposes of this section if the worker is employed by a contractor or subcontractor in the execution of a contract for the public work with the state, a political subdivision of the state, or any officer or public body of the state or a political subdivision of the state.

Added by Acts 1995, 74th Leg., ch. 76, Sec. 5.49(a), eff. Sept. 1, 1995. Amended by Acts 1997, 75th Leg., ch. 165, Sec. 18.01, eff. Sept. 1, 1997.

§Sec. 2258.022. DETERMINATION OF PREVAILING WAGE RATES.

(a) For a contract for a public work awarded by a political subdivision of the state, the public body shall determine the general prevailing rate of per diem wages in the locality in which the public work is to be performed for each craft or type of worker needed to execute the contract and the prevailing rate for legal holiday and overtime work by:

(1) conducting a survey of the wages received by classes of workers employed on projects of a character similar to the contract work in the political subdivision of the state in which the public work is to be performed; or

(2) using the prevailing wage rate as determined by the United States Department of Labor in accordance with the Davis-Bacon Act (40 U.S.C. Section 276a et seq.), and its subsequent amendments.

(b) This subsection applies only to a public work located in a county bordering the United Mexican States or in a county adjacent to a county bordering the United Mexican States. For a contract for a public work awarded by the state, the public body shall determine the general prevailing rate of per diem wages in the locality in which the public work is to be performed for each craft or type of worker needed to execute the contract and the prevailing rate for legal holiday and overtime work as follows. The public body shall conduct a survey of the wages received by classes of workers employed on projects of a character similar to the contract work both statewide and in the political subdivision of the state in which the public work is to be performed. The public body shall also consider the prevailing wage rate as determined by the United States Department of Labor in accordance with the Davis-Bacon Act (40 U.S.C. Section 276a et seq.), and its subsequent amendments, but only if the survey used to determine that rate was conducted within a three-year period preceding the date the public body calls for bids for the public work. The public body shall determine the general prevailing rate of per diem wages in the locality based on the higher of:

(1) the rate determined from the survey conducted in the political subdivision;

(2) the arithmetic mean between the rate determined from the survey conducted in the political subdivision and the rate determined from the statewide survey; and

(3) if applicable, the arithmetic mean between the rate determined from the survey conducted in the political subdivision and the rate determined by the United States Department of Labor.

(c) The public body shall determine the general prevailing rate of per diem wages as a sum certain, expressed in dollars and cents.

(d) A public body shall specify in the call for bids for the contract and in the contract itself the wage rates determined under this section.

(e) The public body's determination of the general prevailing rate of per diem wages is final.

Added by Acts 1995, 74th Leg., ch. 76, Sec. 5.49(a), eff. Sept. 1, 1995. Amended by Acts 1997, 75th Leg., ch. 165, Sec. 18.02, eff. Sept. 1, 1997; Acts 2001, 77th Leg., ch. 1422, Sec. 14.05, eff. Sept. 1, 2001.
Amended by: Acts 2007, 80th Leg., R.S., Ch. 728, Sec. 1, eff. September 1, 2007.

§Sec. 2258.023. PREVAILING WAGE RATES TO BE PAID BY CONTRACTOR AND SUBCONTRACTOR; PENALTY.

(a) The contractor who is awarded a contract by a public body or a subcontractor of the contractor shall pay not less than the rates determined under Section 2258.022 to a worker employed by it in the execution of the contract.

(b) A contractor or subcontractor who violates this section shall pay to the state or a political subdivision of the state on whose behalf the contract is made, $60 for each worker employed for each calendar day or part of the day that the worker is paid less than the wage rates stipulated in the contract. A public body awarding a contract shall specify this penalty in the contract.

(c) A contractor or subcontractor does not violate this section if a public body awarding a contract does not determine the prevailing wage rates and specify the rates in the contract as provided by Section 2258.022.

(d) The public body shall use any money collected under this section to offset the costs incurred in the administration of this chapter.

(e) A municipality is entitled to collect a penalty under this section only if the municipality has a population of more than 10,000.

Added by Acts 1995, 74th Leg., ch. 76, Sec. 5.49(a), eff. Sept. 1, 1995.

§Sec. 2258.024. RECORDS.

(a) A contractor and subcontractor shall keep a record showing:

(1) the name and occupation of each worker employed by the contractor or subcontractor in the construction of the public work; and

(2) the actual per diem wages paid to each worker.

(b) The record shall be open at all reasonable hours to inspection by the officers and agents of the public body.

Added by Acts 1995, 74th Leg., ch. 76, Sec. 5.49(a), eff. Sept. 1, 1995.

§Sec. 2258.025. PAYMENT GREATER THAN PREVAILING RATE NOT PROHIBITED. This chapter does not prohibit the payment to a worker employed on a public work an amount greater than the general prevailing rate of per diem wages.

Added by Acts 1995, 74th Leg., ch. 76, Sec. 5.49(a), eff. Sept. 1, 1995.

§Sec. 2258.026. RELIANCE ON CERTIFICATE OF SUBCONTRACTOR. A contractor is entitled to rely on a certificate by a subcontractor regarding the payment of all sums due those working for the subcontractor until the contrary has been determined.

Added by Acts 1995, 74th Leg., ch. 76, Sec. 5.49(a), eff. Sept. 1, 1995.

SUBCHAPTER C. ENFORCEMENT; CIVIL AND CRIMINAL PENALTIES

§Sec. 2258.051. DUTY OF PUBLIC BODY TO HEAR COMPLAINTS AND WITHHOLD PAYMENT. A public body awarding a contract, and an agent or officer of the public body, shall:

(1) take cognizance of complaints of all violations of this chapter committed in the execution of the contract; and

(2) withhold money forfeited or required to be withheld under this chapter from the payments to the contractor under the contract, except that the public body may not withhold money from other than the final payment without a determination by the public body that there is good cause to believe that the contractor has violated this chapter.

Added by Acts 1995, 74th Leg., ch. 76, Sec. 5.49(a), eff. Sept. 1, 1995.

§Sec. 2258.052. COMPLAINT; INITIAL DETERMINATION.

(a) On receipt of information, including a complaint by a worker, concerning an alleged violation of Section 2258.023 by a contractor or subcontractor, a public body shall make an initial determination as to whether good cause exists to believe that the violation occurred.

(b) A public body must make its determination under Subsection (a) before the 31st day after the date the public body receives the information.

(c) A public body shall notify in writing the contractor or subcontractor and any affected worker of its initial determination.

(d) A public body shall retain any amount due under the contract pending a final determination of the violation.

Added by Acts 1995, 74th Leg., ch. 76, Sec. 5.49(a), eff. Sept. 1, 1995.

§Sec. 2258.053. ARBITRATION REQUIRED FOR UNRESOLVED ISSUE.

(a) An issue relating to an alleged violation of Section 2258.023, including a penalty owed to a public body or an affected worker, shall be submitted to binding arbitration in accordance with the Texas General Arbitration Act (Article 224 et seq., Revised Statutes) if the contractor or subcontractor and any affected worker do not resolve the issue by agreement before the 15th day after the date the public body makes its initial determination under Section 2258.052.

(b) If the persons required to arbitrate under this section do not agree on an arbitrator before the 11th day after the date that arbitration is required under Subsection (a), a district court shall appoint an arbitrator on the petition of any of the persons.

(c) A public body is not a party in the arbitration.

Added by Acts 1995, 74th Leg., ch. 76, Sec. 5.49(a), eff. Sept. 1, 1995.

§Sec. 2258.054. ARBITRATION AWARD; COSTS. (a) If an arbitrator determines that Section 2258.023 has been violated, the arbitrator shall assess and award against the contractor or subcontractor:

(1) penalties as provided by Section 2258.023 and this section; and

(2) all amounts owed to the affected worker.

(b) An arbitrator shall assess and award all reasonable costs, including the arbitrator's fee, against the party who does not prevail. Costs may be assessed against the worker only if the arbitrator finds that the claim is frivolous. If the arbitrator does not find that the claim is frivolous and does not make an award to the worker, costs are shared equally by the parties.

Added by Acts 1995, 74th Leg., ch. 76, Sec. 5.49(a), eff. Sept. 1, 1995.

§Sec. 2258.055. ARBITRATION DECISION AND AWARD FINAL. The decision and award of the arbitrator is final and binding on all parties and may be enforced in any court of competent jurisdiction.

Added by Acts 1995, 74th Leg., ch. 76, Sec. 5.49(a), eff. Sept. 1, 1995.

§Sec. 2258.056. PAYMENT BY PUBLIC BODY TO WORKER; ACTION TO RECOVER PAYMENT.

(a) A public body shall use any amounts retained under this chapter to pay the worker the difference between the amount the worker received in wages for labor on the public work at the rate paid by the contractor or subcontractor and the amount the worker would have received at the general prevailing wage rate as provided in the arbitrator's award.

(b) The public body may adopt rules, orders, or ordinances relating to the manner in which a reimbursement is made.

(c) If the amounts retained by a public body under this chapter are not sufficient for the public body to pay the worker the full amount owed, the worker has a right of action against the contractor or subcontractor and the surety of the contractor or subcontractor to recover the amount owed, reasonable attorney's fees, and court costs.

Added by Acts 1995, 74th Leg., ch. 76, Sec. 5.49(a), eff. Sept. 1, 1995.

§Sec. 2258.057. WITHHOLDING BY CONTRACTOR.

(a) A contractor may withhold from a subcontractor sufficient money to cover an amount withheld from the contractor by a public body because the subcontractor violated this chapter.

(b) If the contractor has made a payment to the subcontractor, the contractor may withhold money from any future payments owed to the subcontractor or sue the subcontractor or the subcontractor's surety for the amount withheld from the contractor by a public body because of the subcontractor's violation.

Added by Acts 1995, 74th Leg., ch. 76, Sec. 5.49(a), eff. Sept. 1, 1995.

§Sec. 2258.058. CRIMINAL OFFENSE.

(a) An officer, agent, or representative of the state or of a political subdivision of the state commits an offense if the person wilfully violates or does not comply with a provision of this chapter.

(b) A contractor or subcontractor of a public work under this chapter, or an agent or representative of the contractor or subcontractor, commits an offense if the person violates Section 2258.024.

(c) An offense under this section is punishable by:

(1) a fine not to exceed $500;

(2) confinement in jail for a term not to exceed six months; or

(3) both a fine and confinement.

Added by Acts 1995, 74th Leg., ch. 76, Sec. 5.49(a), eff. Sept. 1, 1995.

General Decision Number: TX120008 01/06/2012 TX8

Superseded General Decision Number: TX20100009

State: Texas

Construction Types: Heavy and Highway

Counties: Cameron, Hidalgo and Webb Counties in Texas.

HEAVY & HIGHWAY CONSTRUCTION PROJECTS

Modification Number Publication Date

0 01/06/2012

* SUTX2011-003 08/02/2011

Rates Fringes

CEMENT MASON/CONCRETE FINISHER (Paving & Structures)...$ 12.46

FORM BUILDER/FORM SETTER (Structures).....$ 12.30

FORM SETTER (Paving & Curb).....$ 12.16

LABORER

Asphalt Raker.....$ 10.61
Flagger.....$ 9.10
Laborer, Common.....$ 9.86
Laborer, Utility.....$ 11.53
Pipelayer.....$ 11.87
Work Zone Barricade Servicer.....$ 12.88

POWER EQUIPMENT OPERATOR:
Asphalt Distributor.....$ 13.48
Asphalt Paving Machine.....$ 12.25
Broom or Sweeper.....$ 10.33
Crane, Lattice Boom 80 Tons or Less.....$ 14.39
Crawler Tractor.....$ 16.63
Excavator, 50,000 lbs or less.....$ 12.56
Excavator, over 50,000 lbs..$ 15.23
Foundation Drill, Truck Mounted.....$ 16.86
Front End Loader Operator, Over 3 CY.....$ 13.69
Front End Loader, 3 CY or less.....$ 13.49
Loader/Backhoe.....$ 12.77
Mechanic.....$ 15.47
Milling Machine.....$ 14.64
Motor Grader Operator, Rough.....$ 14.62
Motor Grader, Fine Grade....$ 16.52
Scraper.....$ 11.07
Servicer.....$ 12.34
Steel Worker (Reinforcing).....$ 14.07

TRUCK DRIVER
Lowboy-Float.....$ 13.63
Single Axle.....$ 10.82
Single or Tandem Axle Dump..$ 14.53
Tandem Axle Tractor with
Semi Trailer.....$ 12.12

WELDER.....$ 14.02

WELDERS - Receive rate prescribed for craft performing operation to which welding is incidental.

==========
Unlisted classifications needed for work not included within the scope of the classifications listed may be added after award only as provided in the labor standards contract clauses (29CFR 5.5 (a) (1) (ii)).

The body of each wage determination lists the classification and wage rates that have been found to be prevailing for the cited type(s) of construction in the area covered by the wage determination. The classifications are listed in alphabetical order of "identifiers" that indicate whether the particular rate is union or non-union.

Union Identifiers

An identifier enclosed in dotted lines beginning with characters other than "SU" denotes that the union classification and rate have found to be prevailing for that classification. Example: PLUM0198-005 07/01/2011. The first four letters , PLUM, indicate the international union and the four-digit number, 0198, that follows indicates the local union number or district council number where applicable , i.e., Plumbers Local 0198. The next number, 005 in the example, is an internal number used in processing the wage determination. The date, 07/01/2011, following these characters is the effective date of the most current negotiated rate/collective bargaining agreement which would be July 1, 2011 in the above example.

Union prevailing wage rates will be updated to reflect any changes in the collective bargaining agreements governing the rate.

Non-Union Identifiers

Classifications listed under an "SU" identifier were derived from survey data by computing average rates and are not union rates; however, the data used in computing these rates may include both union and non-union data. Example: SULA2004-007 5/13/2010. SU indicates the rates are not union rates, LA indicates the State of Louisiana; 2004 is the year of the survey; and 007 is an internal number used in producing the wage determination. A 1993 or later date, 5/13/2010, indicates the classifications and rates under that identifier were issued as a General Wage Determination on that date.

Survey wage rates will remain in effect and will not change until a new survey is conducted.

WAGE DETERMINATION APPEALS PROCESS

1.) Has there been an initial decision in the matter? This can be:

* an existing published wage determination
* a survey underlying a wage determination
* a Wage and Hour Division letter setting forth a position on a wage determination matter
* a conformance (additional classification and rate) ruling

On survey related matters, initial contact, including requests for summaries of surveys, should be with the Wage and Hour Regional Office for the area in which the survey was conducted because those Regional Offices have responsibility for the Davis-Bacon survey program. If the response from this initial contact is not satisfactory, then the process described in 2.) and 3.) should be followed.

With regard to any other matter not yet ripe for the formal process described here, initial contact should be with the Branch of Construction Wage Determinations. Write to:

Branch of Construction Wage Determinations
Wage and Hour Division
U.S. Department of Labor
200 Constitution Avenue, N.W.
Washington, DC 20210

2.) If the answer to the question in 1.) is yes, then an interested party (those affected by the action) can request review and reconsideration from the Wage and Hour Administrator (See 29 CFR Part 1.8 and 29 CFR Part 7). Write to:

Wage and Hour Administrator
U.S. Department of Labor
200 Constitution Avenue, N.W.
Washington, DC 20210

The request should be accompanied by a full statement of the interested party's position and by any information (wage payment data, project description, area practice material, etc.) that the requestor considers relevant to the issue.

3.) If the decision of the Administrator is not favorable, an interested party may appeal directly to the Administrative Review Board (formerly the Wage Appeals Board). Write to:

Administrative Review Board
U.S. Department of Labor
200 Constitution Avenue, N.W.
Washington, DC 20210

4.) All decisions by the Administrative Review Board are final.

==========

END OF GENERAL DECISION

Border Colonia Access Program
Checklist for Documentation Required for Road Construction

Contractor: _____

Contract Amount: _____

Project/Precinct: _____

Owner's Contract No.: _____

Item	Required Documents	Submitted & Reviewed	Approved	Comments:
	INITIATION OF PROJECT:			
1	Approval to Bid (Purchasing)			
2	Contract - Signed and Excuted			
3	Gen. Liability Insurance - (Expiration Date)			
4	Automobile Liab. Insurance - (Expiration Date)			
5	Worker's Comp. & Empl. Liab. (Expiration Date)			
6	Notice to Proceed			
7	Material Sample & Testing Table Sent to Auditor's Office			
	PAYMENT REQUESTS, INCLUDING FINAL:			
8	Application and Cerification of Payment (A)			
9	Schedule of Values a/k/a 1257/1258			
10	Estimate Quantity Update Worksheet			
11	List of Suppliers and Sub-contractors			
12	Partial Waiver of Liens (Sub-contractors/suppliers)			
13	TxDot Form 252 Contract Time Statement			
14	Payroll Report w/signed Wage Form			
15	Change Order (Requires TxDot Concurrence			
	RETAINAGE PAYMENT: - Final request and request for retainage must be billed separately and approved by C.C.			
16	Punch List			
17	Certificate of Construction Completion			
18	Approval by Commissoner's Court			
19	Contractor's Affidavit of Release (Waiver) of Liens (with power of attorney)(B)			
20	Affidavit of Payment of Debts & Claims-lien bond & indemnity bonds(w/power of attorney)(B)			
21	Consent of Surety to Final Payment(with power of attorney)(B)			
22	Final Blue Prints			

CHANGE ORDER NUMBER ONE(1)

Project: _____

DATE OF ISSUANCE: _____ EFFECTIVE DATE: _____

OWNER: _____
OWNER'S CONTRACT NO: _____

CONTRACTOR: _____ ENGINEER: _____

_____ _____

_____ _____

You ar directed to make the following changes in the Contract Documents.

Description:
1.
2.
3.
4.
5.
6.

Reason for Change Order:
1.
2.
3.
4.
5.
6.

Attachments:

CHANGE IN CONTRACT PRICE:		CHANGE IN CONTRACT TIME:
Original Contract Price $ 0.00		Original Contract Time for Substantial Completion: 0 calendar days or dates
Net Changes from previous Change Order $ 0.00		Net Change from previous Change Orders 0 calendar days
Contract Price prior to this Change Order $ 0.00		Contract Time prior to this Change Order Substantial Completion: 0 calendar days or dates
Net Increase(decrease) of this Change Order $ 0.00		Net Increase(decrease) of this Change Order 0 calendar days
Contract Price with all approved Change Orders $ 0.00	Net % increase(decrease)from original contract price. #DIV/O! %	Contract Time with all approved Change Orders Substantial Completion: 0 calendar days or dates

RECOMMENDED:

By: _____
Enigineer (Authorized Signature)

Date: _____

APPROVED:

By: _____
Owner (Authorized Signature)

Date: _____

ACCEPTED:

By: _____
Contractor (Authorized Signature)

Date: _____

Exhibit E-B

APPLICATION FOR PAYMENT NO.

To: _____ (OWNER)
From: _____ (CONTRACTOR)
Contract: _____
Project: _____
Owner's Contract No. _____ Engineer's Project No. _____
For Work accomplished through the date of: _____

1. Original Contract Price:	_____
2. Net change by Change Order and Written Agreements(+or-):	_____
3. Current Contract Price (1 plus 2):	_____
4. Total completed and stored to date:	_____
5. Retainage (per Agreement):	
____10%____ of completed Work: _____	
_____ of stored material _____	
Total Retainage:	_____
6. Total completed and stored to date less retainage (4 minus 5)	_____
7. Less previous Application for Payments:	_____
8. AMOUNT DUE THIS APPLICATION (6 MINUS 7)	_____

Accompanying Documentation:

CONTRACTOR'S Certification:

The undersigned CONTRACTOR certifies that (1) all previous progress payments received from OWNER on account of Work done under the Contract referred to above have been applied on account to discharge CONTRACTOR'S legitimate obligations incurred in connection with Work covered by prior Applications for Payment numbered 1 through __2__ inclusive: (2) title of all Work, materials and equipment incorporated in said Work or otherwise listed in or covered by this Application for Payment will pass to OWNER at time of payment free and clear of all Liens, security interests and encumbrances (except such as are covered by a Bond acceptable to OWNER indemnifying OWNER against any such Lien, security interest or encumbrance); and (3) all Work covered by this Application for Payments is in accordance with the Contract Documents and not defective.

Date _____

_____
CONTRACTOR

By: _____

State of _____
County of _____
Subscribed and sworn to before me this _____
day of _____

_____
Notary Public
My Commission expires: _____

Payment of the above AMOUNT DUE THIS APPLICATION is recommended.

Date _____

_____
ENGINEER

By: _____

Exhibit E-C

Estimate Quantity Update Worksheet Date:

Roadway:
Control:
Project No:
County:
Est. No: 1

Contractor:
Contract Price:
Work Done this Mo.:
% Complete: #DIV/0!

Date Began: ?
Contract Time: 120
Time Charged: 90
% Time Used: 75.00%

Work Type: Paving & Drainage
Limits:
From:
To:

						FIRST MONTH			SECOND MONTH			THIRD MONTH		
ITEM NO.	DESCRIPTION	UNIT	PROJECT QTY	Unit Price	Project Amount	MONTHLY QUANTITY	QTY to Date	Item Cost (Monthly)	MONTHLY QUANTITY	QTY to Date	Item Cost (Monthly)	MONTHLY QUANTITY	QTY to Date	Item Cost (Monthly)
	(901)ADMINISTRATIVE													
	(902) PRELIMINARY ENGINEERING													
	(903) CONSTRUCTION ENGINEERING													
	(904) RIGHT-OF-WAY													
	(905) ROADWAY CONSTRUCTION													
100	PREP ROW	Sta.	1.100	$1,800.00	$1,980.00	1.000	1.000	$0.00		0	$0.00		0	0.00
110	BACKFILL (TY A)	Sta.	1.000	$600.00	$600.00	0.000	0	$0.00		0	$0.00		0	0.00
247	FLEX BASE (RDWY DEL)(TY D GR 6 CL 4)	CY	76.000	$28.00	$2,128.00	0.000	0	$0.00		0	$0.00		0	0.00
260	LIME (TY A SLURRY) OR (TY B)	TON	1036.000	$2.00	$2,072.00	0.000	0	$0.00		0	$0.00		0	0.00
260	LIME TREAT SUBGR (DC)(12")	SY	0.000	$6,000.00	$0.00	0.000	0	$0.00		0	$0.00		0	0.00
262	LIME (TY A SLURRY) OR (TY B)	TON	7.800	$3,000.00	$23,400.00	0.000	0	$0.00		0	$0.00		0	0.00
262	LME TRT FOR BS CRS (NEW/EXT BS)(DC)(6")	SY	1277.800	$6.00	$7,666.80	0.000	0	$0.00		0	$0.00		0	0.00
310	ASPH MATRL (MC-30)	GAL	246.7	$6.00	$1,480.20	0.000	0	$0.00		0	$0.00		0	0.00
500	MOBILIZATION	LS	1.000	$3,000.00	$3,000.00	0.000	0	$0.00		0	$0.00		0	0.00
502	BARRICADES, SIGNS, AND TRAF HANDLE	MO	1.000	$1,000.00	$1,000.00	0.000	0	$0.00		0	$0.00		0	0.00
529	CONC CURB AND GUTTER (TY A)(BARRIER)	LF	600.000	$7.50	$4,500.00	0.000	0	$0.00		0	$0.00		0	0.00
644	SMALL RDSD SGN ASSM (TY A)	EA	2.000	$300.00	$600.00	0.000	0	$0.00		0	$0.00		0	0.00
644	SMALL RDSD SGN ASSM (TY F)	EA	2.000	$500.00	$1,000.00	0.000	0	$0.00		0	$0.00		0	0.00
658	DEL ASM TY A (D-SY)	EA	4.000	$100.00	$400.00	0.000	0	$0.00		0	$0.00		0	0.00
666	REFL PAV MRK TY I (Y)(SLD)(4")	LF	400.000	$0.25	$100.00	0.000	0	$0.00		0	$0.00		0	0.00
666	REFL PAV MRK TY I (Y)(BRK)(4")	LF	140.000	$0.25	$35.00	0.000	0	$0.00		0	$0.00		0	0.00
672	RAIS PAV MRKR CL B (REFL)(TY II-A-A)	EA	24.000	$3.50	$84.00	0.000	0	$0.00		0	$0.00		0	0.00
3146	HOT MIX (TY D)	TON	105.5	$34.00	$3,587.00	0.000	0	$0.00		0	$0.00		0	0.00
5249	TEMP SEDMT CONT FENCE	LF	70.000	$3.00	$210.00	0.000	0	$0.00		0	$0.00		0	0.00
							0			0	$0.00		0	0.00
	(906) DRAINAGE													
464	RC PIPE (CL III)(18")	LF	404.000	$25.00	$10,100.00	0.000	0	$0.00		0	$0.00		0	0.00
464	RC PIPE (CL III)(24")	LF	120.000	$30.00	$3,600.00	0.000	0	$0.00		0	$0.00		0	0.00
465	INLET (COMPL)(TY A)	EA	2.000	$2,000.00	$4,000.00	0.000	0	$0.00		0	$0.00		0	0.00
465	INLET (COMPL)(TY C)	EA	2.000	$1,500.00	$3,000.00	0.000	0	$0.00		0	$0.00		0	0.00
465	MANH (COMPL)(TYM)	EA	1.000	$2,000.00	$2,000.00	0.000	0	$0.00		0	$0.00		0	0.00
465	INLET EXT.	EA	2.000	$700.00	$1,400.00	0.000	0	$0.00		0	$0.00		0	0.00
467	SET (TY II)(18")(RCP)(1:6)	EA	4.000	$550.00	$2,200.00	0.000	0	$0.00		0	$0.00		0	0.00
467	SET (TY II)(24")(RCP)(1:6)	EA	1.000	$650.00	$650.00	0.000	0	$0.00		0	$0.00		0	0.00

Monthly Totals:			
	$0.00	$0.00	0.00
ADMINISTRATIVE (901)			
PRELIMINARY ENGINEERING (902)			
CONSTRUCTION ENGINEERING (903)			
RIGHT-OF-WAY (904)			
Roadway (905):	$0.00	$0.00	0.00
Drainage (906):	$0.00	$0.00	0.00

Total to Date

Roadway (905):	$0.00
Drainage (906):	$0.00
Total	$0.00

Prepared and Checked By: Signature: _____ Date: _____
Printed Name:

_____ Contractor Name
_____ Starting Date
_____ Project Ending Date
_____ Retainage Percent

Application No.: _____
Application Date: _____
Period To: _____
Engineer Firm: _____

Summary

CSJ#	PROJECT NAME	Original Schedule Value	Revised Schedule Value	Payment Application No 1	Payment Application No 2	Payment Application No 3	Total To Date	Balance To Finish	Retainage	Net	Payment To Date	Payment Due
		$ -	$ -	$ -	$ -	$ -	$ -	$ -	$ -	$ -	$ -	$ -
		$ -	$ -	$ -	$ -	$ -	$ -	$ -	$ -	$ -	$ -	$ -
		$ -	$ -	$ -	$ -	$ -	$ -	$ -	$ -	$ -	$ -	$ -
		$ -	$ -	$ -	$ -	$ -	$ -	$ -	$ -	$ -	$ -	$ -
		$ -	$ -	$ -	$ -	$ -	$ -	$ -	$ -	$ -	$ -	$ -
		$ -	$ -	$ -	$ -	$ -	$ -	$ -	$ -	$ -	$ -	$ -
		$ -	$ -	$ -	$ -	$ -	$ -	$ -	$ -	$ -	$ -	$ -
		$ -	$ -	$ -	$ -	$ -	$ -	$ -	$ -	$ -	$ -	$ -

Exhibit E-E

Test Report Table

					Contractor Name				
					CSJ#	CSJ#	CSJ#	CSJ#	CSJ#
Material	**Test**	**Description**	**Required**	**Remarks**					
Subgrade	Tex-101-E Part III	Pulverization							
	Tex-113	Moist. Density Curve							
	Tex-115-E	In-place Density							
		Thickness							
		Proof Roll							
Flex Base	Tex-101-E	Preparing Soils and Flex Bases							
	Tex-104-E	Determining Liquid Limit of Soils							
	Tex-105-E	Determining Plastic Limit of Soils							
	Tex-106-E	Calculating the Plasticity Index							
	Tex-107-E	Linear Shrinkage							
	Tex-110-E	Particle Size Analysis							
	Tex-113-E	Moisture Density Relationship of Base Materials(includes Limed)							
	Tex-116-E	Wet Ball Mill Method Tex							
	Tex-117-E	Triaxial Compression for Base Material (includes Limed)							
	Tex-115-E	In-place Density							
		Thickness							
En-1	IAW ASTM 4609								
	Tex-103-E								
	Tex-114-E								
	TexDOT 121 E								
	ASTM D 4546								
	ASTM D 1587								
	Tex115-E								
Hot Mix	Tex-207-F	Determining Density of Compacted Bituminous Mixtures							
	Tex-208-F	Test for Stabilometer Value of Bituminous Mixtures							
	Tex-210-F	Determining Asphalt Content of Bituminous Mixtures by Extraction							
	Tex-228-F	Determining Asphalt Content of Bituminous Mixtures by the Nuclear Method							
	Tex-229-F	Combined HMAC Cold Belt Sampling and Testing Procedure							
	Tex-236-F	Determining Asphalt Content from Asphalt Paving Mixtures By the Ignition Method							
	Tex-207-E	Determining Density of Compacted Bituminous Mixtures							
	Tex-212-E	Determining Moisture Content of Bituminous Mixtures							
	Tex-213-E	Determining Hydrocarbon-Volatile Content of Bituminous Mixtures							
In-Place Density	Texas SDHPT Bullentin C-14								
	ASTM D-2950.76								
	AASHTO T-166								
Lime	Tex-600-J	Lime Testing Procedure		Waive testing if less than 50 Tons from a Pre-Approved Source					
Rcp		Three Edge Bearing Test		1 pipe for each 100 pipe					

Exhibit E-G

ASAGO CONSTRUCTION
"QUALITY AND SERVICE"

RAUL IGLESIAS
Manager

ASAGO, LLC
2113 Pecos
Mission, TX 78572
(956)607-0741 office
(956)585-7040 fax
iglesias@hiline.net

October 1, 2008

Mr. Javier Hinojosa, P.E.
Javier Hinojosa Engineering
4126 E. Dove Ave.
Mcallen, TX 78504

RE: Hidalgo County Colonia Access Program
Drainage and Paving Construction at El Sol Subdivision Unit # 1 & 2
Contract No.: C-CAP-08-021-7-01

Mr. Hinojosa:

The following is the list of suppliers used in the above mentioned projects as per the County's request:

Rio Valley Pipe 7301 W. Exp. 83 Mission, TX 78572 (956)-584-5770

If you have any questions, please call me at (956) 607-0741

Best regards,

Raul Iglesias
Raul Iglesias, Manager

DRAFT

Exhibit E-H

PARTIAL/FINAL WAIVER OF LEIN

THE STATE OF TEXAS

COUNTY OF_____

The undersigned contracted with _____
_____to furnish_____
in connection with certain improvements to real property located in_____
County, Texas, and owned by_____
Which improvements are described as follows:

_____
_____
_____

In consideration of Pay Estimate No _____in the amount of_____
_____DOLLAR($_____)and other good and valuable consideration, the receipt and sufficiency of which is hereby acknowledged and confessed, the undersigned does hereby waive and release any mechanic's lien or materialmen's lien or claims of lien that the undersigned has or hereafter has on the above mentioned real property on account of any labor performed or materials furnished or to be furnished or labor performed and materials furnished by the undersigned pursuant to the above-mentioned contract or any constitutional lien that the undersigned may have.

Undersigned hereby guarantees that all bids for labor performed and/or materials furnished in the erection and construction of such improvements on the Property have been fully paid and satisfied and Undersigned does further guarantee that if for any reason a lien or liens are filed for material or labor against said Property arising out of any bills for material or labor in connection with the erection or construction of said improvements thereon, Undersigned will obtain a settlement of such lien or liens and a proper release thereof shall be obtained.

_____
CONTRACTOR

BY:_____
TITLE

SWORN TO AND SUBSCRIBED BEFORE ME, on this the_____day of_____,20__to certify which witness my hand and seal of office.

_____
NOTARY PUBLIC in and for the State of Texas

My Commission Expires: _____

Exhibit E-I

CONTRACTOR'S AFFIDAVIT OF PAYMENTS OF DEBTS AND CLAIMS

PROJECT: **PROJECT NO.**
OWNER:
CONTRACTOR:
ENGINEER:

The Contactor in accordance with the Contract Documents, hereby certifies that, except as listed below, all obligations for all materials and equipment furnished, for all work labor, and services performed, and for all known indebtedness and claims against the Contractor for damages arising in any manner in connection with the performance of the Contract referenced above for which the Owner or his property might in any way be held responsible have been paid in full or have otherwisse been satisfied in full.

EXCEPTIONS: (If none, write "NONE". The Contractor shall furnish a bond acceptable to the Owner for each exception.)

CONTRACTOR

By

Title

Subscribed and sworn to before me this day of

Notary Public:

My Commission Expires:

Prevailing Wage Rates
Certification Statement

Date _____

Project Name _____ **CSJ# _____**

Contractor _____ **Application# _____**

I, _____ do hereby state:
(Name of Project Director)

1. That a payroll (form WH-347 or similar form) was submitted for contract work Performed for the period covered by the attached application.
2. That a statement of compliance(form WH-347 or similar form) was submitted with the payroll.
3. The certified payroll complies with the classifications and minimum wage rates Stipulated in the contract.
4. That a minimum of one interview was conducted with laborers using Form HUD-11 or similar.

_____
Signature

CERTIFICATE OF CONSTRUCTION COMPLETION

THIS IS TO CERTIFY THAT ON _____ DAY OF _____A FINAL INSPECTION was made of the project herein described.

CONTRACT

CONTRACT DATE: _____
OWNER: _____
CONSTRUCTION CONTRACTOR: _____
OF THE CITY OF _____ STATE OF _____

PROJECT DESCRIPTION

CONSTRUCTION OF _____

CONTRACT NO: _____
Located in or near the City/Precinct Of _____

THIS IS TO CERTIFY"

1. That the work has been completed in accordance with the plans and specifications and all addenda, change orders, supplemental agreements thereto, and with the following exceptions:
   _____

2. That the sum of _____, deducted from the final payment of the Contractor is a fair and equitable settlement for the foregoing except work.

3. That the contractor has presented a "Certificate of Release" starting under oath, that all claims arising out of the performance of work have been fulfilled, and the Owner is released from all claims arising under or by virtue of said contract.

4. That the CONTRACTOR has presented in behalf of itself and its sureties, satisfactory evidence that it is bound to repair, replace, and make good any faulty workmanship and/or materials discovered in the work within a period of one year from this date, as provided in said contract.

5. Amount of Original Contract _____
   Present Amount of Contract _____
   Total Amount of earned to Date _____
   Less: previous payments _____
   Balance _____
   Authorized deductions _____
   AMOUNTY OF FINAL PAYMENT _____

6. That the final payment in the amount of _____ _____ is now due and payable.

_____
Engineer's Signature

CONCURRED BY:

_____
Contractor's Name

By:_____

Title: _____

CONCURRED BY:

_____
City of Weslaco Mayor

CONTRACTOR'S AFFIDAVIT OF RELEASE OF LIENS

PROJECT: **PROJECT NO.**
OWNER:
CONTRACTOR:
ENGINEER:

The Contractor, in accordance with the Contract Documents, and in consideration for the full and final payment to the Contractor for all services in connection with the project, does hereby waive and release any and all liens, or any and all claims to liens which the Contractor may have on or affecting the project as a result of its contract(s) for the Project or for performing labor and/or furnishing materials in any way connected with the construction of any aspect of the project. The Contractor further certifies and warrants that all subcontractors of labor and/or materials for the Project, except as listed below, have been paid in full for all labor and/or materials supplied to, for through or at the direct or indirect request of the Contractor prior to, through and including the date of this affidavit.

EXCEPTIONS: (If none, write "NONE". The Contractor shall furnish a bond acceptable to the Owner for each exception.)

CONTRACTOR

By

Title

Subscribed and sworn to before me this day of

Notary Public:

My Commission Expires:

Form L